Colour television

# 70KV5716/22M/28R/29R/30R/36R
# 70KV5717/22M/23R/26R/28R/29R/30R/36R
# 70KV5787/26R
# 287865IR/39R

Service
Service
Service

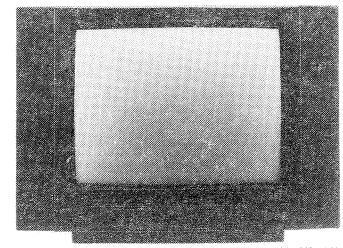

44 210 A11

# Service Manual

Safety regulations require that the set be restored to its original condition and that parts which are identical with those specified be used.

## CHASSIS G110

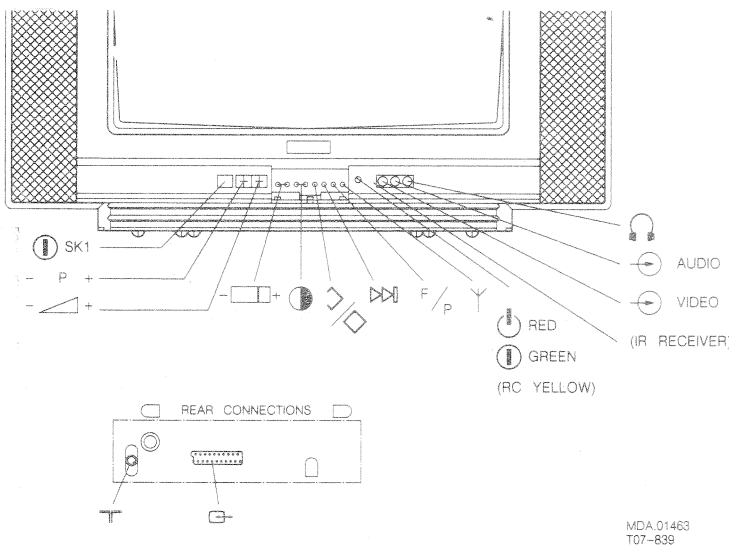


MDA.01463
T07-839

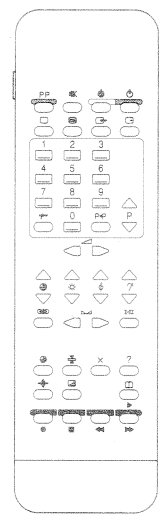

MDA.01406
T28/821

RC5903

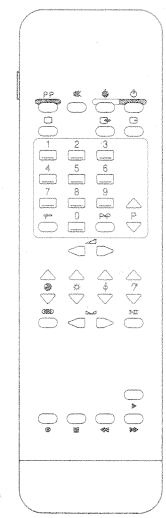

MDA.01397
T28/821

RC5905
-/39R

220-240 V (± 10%)
90 W

A66EAK51X03

axbxc
806x585x477 mm

2x10W/8Ω

70KV5716/22 } PAL B/G
70KV5717/22 } SECAM B/G

70KV5716/28 } PAL ITALY
70KV5717/28 }

70KV5716/29
/30/36 } PAL B/G
70KV5717/23
/26/29/30/36 }

70KV5787/26 } PAL B/G/I
287865IR/39 } SECAM B/G/L/L'

**UV816**

VHFa : 47-170 MHz
VHFb : 170-450 MHz
UHF : 450-855 MHz

Documentation Technique Service Dokumentation Documentazione di Servizio Huolte-Ohje Manual de Servicio Manual de Serviço

Subject to modification
4822 727 16528
Printed in The Netherlands
© Copyright reserved

Published by
Service Consumer Electronics

The following diagrams of the basic manual CHASSIS G110 can be used for these set types

Die nachstehenden Schaltbilder der Grunddokumentation CHASSIS G110 können für diese Gerätetype gebraucht werden.

Les schemas suivants de la documentation CHASSIS G110 peuvent être utilisés pour ces types d'appareil.

| Circuit<br>Schaltung<br>Circuit | **70KV5716/22M**<br>(P/S B/G) | **70KV5717/22M**<br>(P/S B/G) | **70KV5716/28R**<br>(PAL ITALY) | **70KV5717/28R**<br>(PAL ITALY) | **70KV5716 /29R/30R/36R**<br>(PAL B/G) | **70KV5717 /23R/26R/29R /30R/36R**<br>(PAL B/G) | **287865IR/39R**<br>(PAL B/G/I) (SECAM B/G/L/L') | **70KV5787/26R**<br>(PAL B/G/I) (SECAM B/G/L/L') |
|---|---|---|---|---|---|---|---|---|
| Control<br>Bedienung<br>Commande | A | A | A | A | A | A | A | A |
| Supply/Synchronisation<br>Speisung/Synchronization<br>Alimentation/Synchronisation | B | B | B | B | B | B | B | B |
| Tuner/IF<br>Kanalwähler/ZF<br>Sélecteur de canaux/FI | C-3 | C-3 | C-3 | C-3 | C-2 | C-2 | C-1 | C-1 |
| Chrominance/Luminance<br>Farbart/Leuchtdichte<br>Chrominance/Luminance | D | D | D | D | D | D | D | D |
| Sound<br>Ton<br>Son | E | E | E | E | E | E | E | E |
| TXT-Decoder/FLOF<br>Videotext-Decoder/FLOF<br>Decodeur de télétexte/FLOF | Not Present<br>Nicht Anwesend<br>Absent | Present<br>Anwesend<br>Present | Not Present<br>Nicht Anwesend<br>Absent | Present<br>Anwesend<br>Present | Not Present<br>Nicht Anwesend<br>Absent | Present<br>Anwesend<br>Present | Not Present<br>Nicht Anwesend<br>Absent | Present<br>Anwesend<br>Present |

| | | |
|---|---|---|
| 1 | 4822 438 40113 | Rear cover |
| 2 | 4822 492 70143 | Spring |
| 3 | 4822 404 30983 | Bracket |
| 4 | 4822 256 91373 | Bracket |
| 6 | 4822 410 26538 | Push button assy |
| 7 | 4822 410 26817 | Push button assy |
| 8 | 4822 218 20849 | Keyboard (soldered) |
| | 4822 218 20806 | Keyboard |
| 9 | 4822 492 63733 | Spring |
| 11 | 4822 462 71537 | Foot |
| 12 | 4822 458 40484 | Grill (left) |
| | 4822 458 40485 | Grill (right) |
| /22 | 4822 458 40492 | Grill (left) |
| /22 | 4822 458 40493 | Grill (right) |
| 13 | 4822 325 80223 | Grommet |
| 14 | 4822 502 12865 | Screw (spindle) |
| 16 | 4822 505 10903 | Nut |
| 17 | 4822 404 30869 | Bracket |
| 18 | 4822 157 53091 | Degaussing coil |
| 19 | 4822 454 12266 | Ornamental plate |
| /39 | 4822 460 10958 | Ornamental plate |
| 21 | 4822 432 92364 | Door |
| /22 | 4822 432 92389 | Door |
| 22 | 4822 417 11015 | Hinge |
| 23 | 4822 410 26818 | Knob |
| 24 | 4822 492 32656 | Spring |
| 26 | 4822 240 40162 | Loudspeaker |
| | 4822 320 20155 | Cable EHT |
| | 4822 267 50823 | Connector for keyboard |
| | 4822 218 20689 | RC5903 |
| | 4822 218 20746 | RC5905 |
| | 4822 459 61166 | Textplate around knobs |

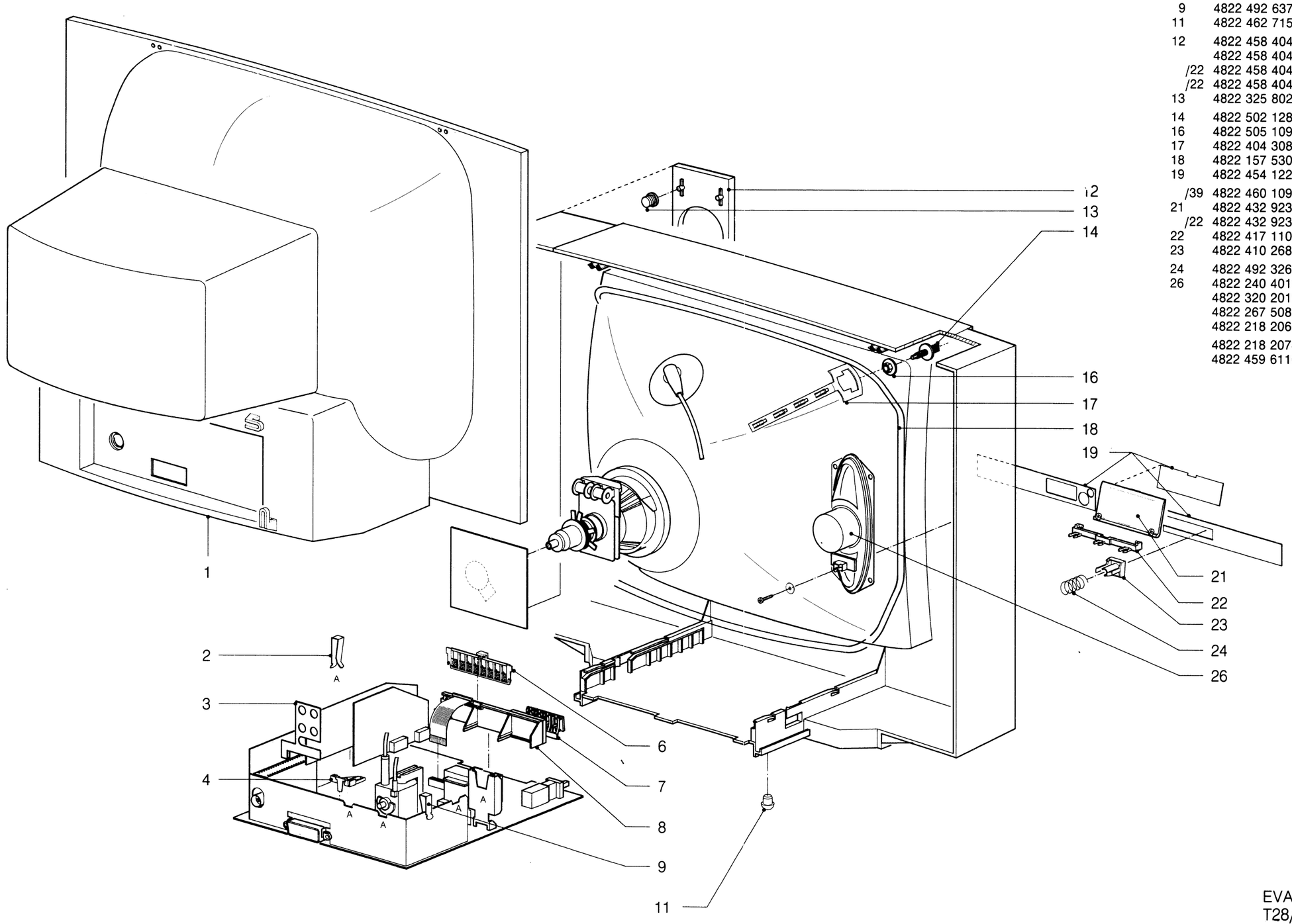


EVA.00759
T28/847

# Colour television CHASSIS G110SVHS

# *SERVICE MANUAL*

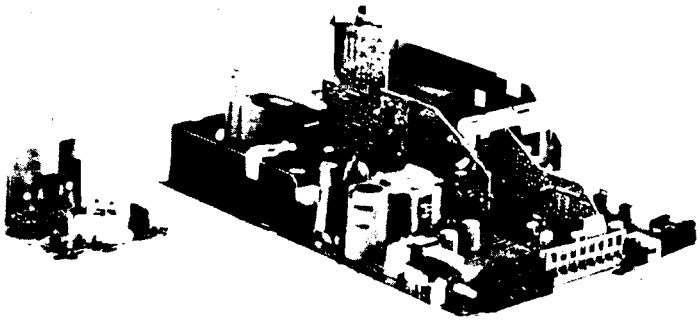

45 081 A11

**INHALTSVERZEICHNIS** **Sette**


Technische Daten
Warnungen
Bemerkungen
Mechanische Anweisungen
Elektrische Anweisungen:
- Einstellungen an der Hauptplatine 4
- Einstellungen am Stereo-Tonmodul 4
- Einstellungen am NICAM-Tonmudul 4
- Einstellungen an der Bildrohrenplatine 4
- Einstellung am Videotextdecoder 4
Uebersicht: Printplatten 5
Verdrahtungsplan 6
Blockschaltbild SVHS 7
Schaltbild A (Bedienung + SVHS bedienung) . 7
Schaltbild B (Speisung und Ablenkung) 8
Schaltbild C-1 (Kanalwahler/ ZF) 9
Schaltbild C-2 (Kanalwahler/ ZF) **10**
Schaltbild C-3 (Kanalwahler/ZF) **11**
Schaltbild D (Chrominanz / Luminanz) 12
Schaltbild Bildrohrenplatine 13
Schaltbild SVHS-Ton **13**

**Self**

Printdarstellung SVHS Platine 14
Printdarstellung Bildrohrenplatine 15
Printdarstellung Hauptplatine 15,16
Printdarstellung Videotext decoder 17
Schaltbild Videotext decoder 17
Schaltbild E1 (Stereo-Tonmodul) 18
Printdarstellung 'surround sound' platine 19
Printdarstellung Stereo-Tonmodul 19
Printdarstellung NICAM-Tonmodul **20**
Schaltbild E2 (NICAM-Tonmodul) 21
Elektrische Stuckliste:
- Hauptplatine 22,23,24
- 'Surround sound' Platine 24
- Bildrohrenplatine **24**
- Videotext/FLOF decoder **25**
- SVHS Platine **25**
- Stereo Tonmodul **26**
- NICAM Tonmodul 26,27
Schnelle Fehlerdiagnose Uebersicht **28**


DocumentationTechnique Service Dokumentation Documentazione d' Servizio Huolte-Ohje Manual de Servicio Manual de Servicio

**TECHNISCHE DATEN**

| | |
|---|---|
| Netzspannung | 220-240V (± 10%); 50 Hz (± 5 |
| Antenneneingangsimpedanz | 75 Q - coax |
| Mindestantennenspannung VHP | 30 uV |
| Mindestantennenspannung UHF | 40 \|JV |
| Höchstantennenspannung VHP | 100mV |
| Höchstantennenspannung UHF | 100 mV |
| Farbträgerfangbereich | + 300 Hz/- 300 Hz |
| Horizontalfangbereich | + 600 Hz/- 600 Hz |
| Vertikalfangbereich | + 5 Hz/- 5 Hz |
| Bildröhren | 25" A59EAK01X03 |
| | 28" A66EAK51X03 |

Ortsbedienungsfunktionen:

⏀, ◿ ±, F/P ±, F/P, ◐ ±, ▭ ±, ◇/◇, ⏭, [Y]

Anzeigen
- On Screen Display (OSD)
- LED (⏀, ⏻, RC5)

VCR-Programme: 0-59
Abstimm- und Bedienungssystem: PLL

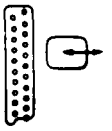

1 – Ton ⊖→ R (0,5V RMS ≤ 1kΩ)
2 – Ton →⊙ R (0,2–0,2V RMS ≥ 10kΩ)
3 – Ton ⊖→ L (0,5V RMS ≤ 1kΩ)
4 – Ton ⊥
5 – Blau ⊥
6 – Ton →⊙ L (0,2–0,2V RMS ≥ 10kΩ)
7 – Blau (0,7$V_{pp}$/75Ω)
8 – RC5 Daten 500–800$mV_{pp}$ + Status FBAS 0–2V (L) 9,5–12V (H)
9 – Grün ⊥
11 – Grün (0,7$V_{pp}$/75Ω)
13 – Rot ⊥
15 – Rot (0,7$V_{pp}$/75Ω)
16 – RGB Austastung 0–0,4V/75Ω (L) 1–3V/75Ω (H)
17 – FBAS ⊖→ ⊥
19 – FBAS ⊖→ (1$V_{pp}$/75Ω)
20 – FBAS →⊙ (1$V_{pp}$/75Ω)
21 – Erdabschirmung

⊙ CINCH FBAS →⊙ 1$V_{pp}$/75Ω

⊙ CINCH Audio →⊙ 0,2-2V RMS ≥ 10kΩ

⊙ 3.5mm 2 x 10W/8Ω (Für Geräten ohne Innenlautsprecher)

⊙ 6.3mm 🔈/🎧 8 – 1000 Ω

SVHS

1 – ⊥
2 – ⊥
3 – Y: →⊙ 1 $V_{pp}$ / 75 Ω
4 – C: →⊙ 300 $mV_{pp}$ / 75 Ω

⊙ CINCH Audio →⊙ L 0,2-2 V RMS ≥ 10 kΩ

⊙ CINCH Audio →⊙ R 0,2-2 V RMS ≥ 10 kΩ

## WARNUNGEN

1. Ein zu reparierendes Gerät ist immer über einen Trenntransformator an die Netzspannung anzuschliessen.
2. Die Sicherheitsvorschriften erfordern es, dass sich das Gerät nach der Reparatur in seinem originalen Zustand befindet und dass die zur Reparatur benutzten Ersatzteile mit den Original-Ersatzteilen identisch sind.
   Die Sicherheits-Bauteile sind mit der Markierung ⚠ versehen.
3. Um Beschädigungen an integrierten Schaltungen Dioden, Transistoren usw. zu vermeiden, sind Hochspannungsüberschläge unbedingt zu vermeiden. Damit die Bildröhren keinen Schaden nimmt, muss beim Entladen die in Bild 1 dargestellte Methode angewandt werden. Es sind eine Hochspannungssonde und ein Universalmessgerät einzusetzen (Stellung DC-V)
   So lange entladen, bis die Anzeige am Messgerät 0 Volt geworden ist (nach ca. 30s).
4. **ESD-Elektrostatische Entladungen.**

   Alle ICs und Halbleiter sind empfindlich gegen elektrostatische Entladungen (ESD).
   Unvorschriftmässige Behandlung von Halbleitern im Reparaturfall kann zur Zerstörung dieser Bauteile oder zu einer drastischen Reduzierung der Lebensdauer führen.
   Sorgen Sie dafür dass Sie sich im Reparaturfall über ein Pulsarmband mit Widerstand auf dem gleichen Potential wie die Masse des Gerätes befinden.
   Bauteile, Werkzeuge und Hilfsmittel sind auf das gleiche Potential zu legen.
5. Die flachen Rechteck-Bildröhren bilden zusammen mit der Ablenkeinheit und der Mehrpoleinheit eine Gesamtheit. Die Ablenk- und Mehrpoleinheit wurden im Werk genau eingestellt. Von einem Abgleich dieser Einheit in Reparaturfällen wird denn auch abgeraten.
6. Das Hochspannungskabel ist in den Zeilenausgangstranformator geklebt. Das Kabel lässt sich mithin nicht auswechseln.
7. Während der Messungen am Hochspannungsteil und an der Bildröhre ist grösse Vorsicht geboten. (Sicherheitsvorschriften beachten)
8. Bei eingeschalteten Gerät dürfen keine Module oder sonstige Einsatzteile ausgetauscht werden.

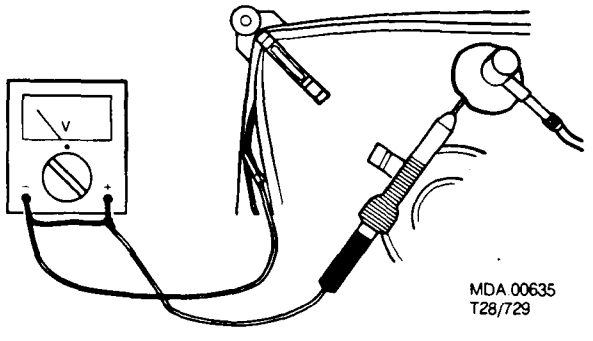


Fig. 1

9. Gemäss den Vorschriften ist beim Austausch der Bildröhre Schutzkleidung und eine Sicherheitsbrille zu tragen.
10. Zum Abgleich sind ausschliesslich Kunststoff Werkzeuge zu benutzen (keine Metallwerkzeuge verwenden).
    Dadurch wird vermieden, dass ein Kurzschluss entstehen kan oder eine Schaltung instabil wird.

## BEMERKUNGEN

1. Die Gleichspannungen und Oszillogramme sind gegen einem möglichst nahen Massepunkt auf der Printplatte zu messen.
2. Die Gleichspannungen sind dort wo notwendig mit und ohne Antennensignal gemessen worden. Diese Werte sind mithin mit Symbole gekennzeignet.
3. Die Oszillogramme sind wo verlangt mit maximaler und minimaler Helligkeit, Sättigung und Kontrast gemessen worden.
   Die Oszillogramme im Speisungsteil sind in Normalberieb (⏻) und in Bereitschaft (⏾) gemessen worden.
   Als Eingangssignal wurde ein Farbbalkenmuster eingesetzt.
4. Der Bildröhrenprint ist mit Funkenstrecken versehen. Jede Funkenstrecke ist zwischen einer Elektrode der Bildröhre und dem Aquadag (Aussenbelag der Bildröhre) geschaltet.
5. Für die Modulen (board-to-board) benutzte Steckverbinder sind goldplatiert (gold-plated) und dürfen nur gegen Steckverbinder gleichen Typs ausgewechselt werden.
6. Die Positionsnummern der Steckverbinder bestehen aus 2 Ziffern und 1 Buchstabe. Der Buchstabe ist eine Kennzeichnung der Farbe dieses Steckverbinders. Beispiel: 23G ist ein grauer Steckverbinder und 24R ist ein roter Steckverbinder.
7. Im Falle der Fehlersuche und/oder Reparatur an den Videotext-decoder lässt sich die Zugänglichkeit der Schaltung und Bauelemente durch Einsatz von Verlängerungsprintplatten vergrössern.
   Die Bestellnummern für diese Verlängerungsprintplatten sind:
   6 fach 4822 395 30259
   8 fach 4822 214 31402

CHASSIS G110 SVHS

**MECHANISCHE ANWEISUNGEN**

**1. Servicestellung**

Zur Erleichterung der Fehlersuche und Reparatur am Gerät lässt sich das Chassis nach Trennen des Steckverbinders 10B (Entmagnetisierung) aus dem Gehäuse herausziehen, um 180° wenden und hinter das Gehäuse stellen.

**2. Befestigung der FSQ-Bildröhre (flach und rechteckig)**

Ausbau der Bildröhre:
Die Mutter mit einem Steckschlüssel (10 mm) rechtsherum drehen, (siehe fig. 2).

Einbau der Bildröhre:
Den Bolzen mit einem Steckschlüssel (4 mm) linksherum in Maske drehen.
Die Bildröhre in die Maske anbringen. Dies geht am besten falls man das Gehäuse auf die Vorderseite hinlegt.
Die Bildröhre in der Mitte der Maske stellen.
Den Bolz rechtsherum drehen, bis man die Mutter auf den Bolz drehen kann.
Die Mutter linksherum ein wenig fest gegen die Bildröhrebefestigung drehen.
Dann den Bolz rechtsherum drehen, bis das Ganze fest montiert ist. (Die Mutter darf nicht mehr drehen).

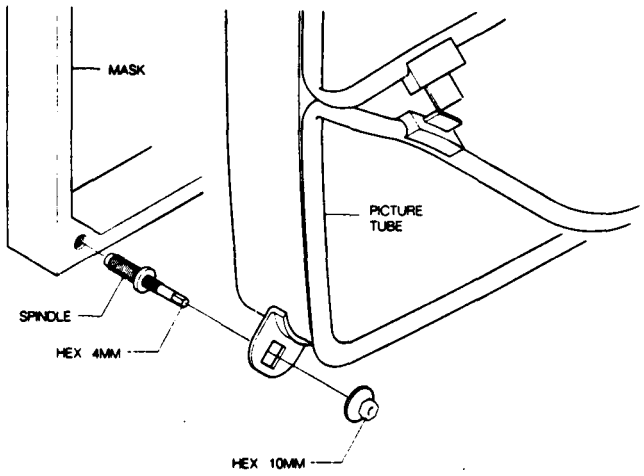


Fig. 2 EVA 00608 T-27/820

**3. Servicearbeiten an kleinen Chipteilen**

**1 Allgemeine Warnungen bei Handhabung und Lagerung**

a. Oxydation der Chipanschlüsse führt zu einer mangelhaften Verlötung. Die Anschlüsse dürfen nicht mit ungeschützten Händen gefasst werden.
b. Wenn gelagert wird, sind folgende Stellen an denen Oxydation eintreten wird und der Kapazitätswert und Widerstandswert beeinträchtigt werden, zu vermeiden:
   1. in Gebieten mit Schwefel oder Chlorgas;
   2. Stellen die direkter Sonneneinstrahlung ausgesetzt sind;
   3. Stellen mit hohen Temperaturen und hoher Feuchtigkeit.
c. Grobe Behandlung von Printplatten die oberflächenmontierte Bauteile enthalten (s.g. SMDs) kann zu Schaden sowohl an den Bauteilen als auch an den Printplatten führen. Mit SMDs bestückte Printplatten sollten niemals gebogen werden. Verschiedene Printplattenwerkstoffe dehnen aus oder schrumpfen bei verschiedenen Geschwindigkeiten, wenn sie erwärmt oder gekühlt werden, und die Bauteile und/oder Lötstellen können durch die Spannung Schaden nehmen. Chipbauteile dürfen nie gerieben oder gekratzt werden, da dies zu Wertänderungen des Bauteils führen kann. Auch darf die Printplatte nicht über eine Fläche geschoben werden.

**3.2 Beseitigung eines Chips**

a. Lötzinn 2 bis 3 Sekunden an jedem Anschluss des Chips erhitzen. Kleine Bauteile können mit dem Lötkolben beseitigt werden; es wird in waagerechter Richtung eine geringe Kraft ausgeübt beim Entfernen des Lötzinns. Siehe Bild 3A oder:
b. Chip mit einer Pinzette fassen und vorsichtig hinstellen; es wird die Lötkolbenhitze, jedem Anschluss zugeführt, angewandt. Siehe Bild 3B.
c. Die Printplatte soll frei von überflüssigem äinnlot sein, damit sie fertig für das Bestücken neuer Bauteile ist. Siehe Bild 3C.

**Warnung bei Beseitigung:**

a. Wenn mit einem Lötkolben gearbeitet wird, ist der richtige Druck anzuwenden und vorsichtig zu handeln.
b. Beim Ausbauen des Chips darf mit der Pinzette keine unzulässige Kraft aufgewandt werden.
c. Der zu verwendende Lötkolben (ca. 30 Watt) sollte vorzugsweise ausgestattet sein mit einer Wärmeregelung (Löttemperatur ca. 225 bis 250 °C).
d. Ein ausgebauter Chip darf **niemals** wieder verwendet werden.

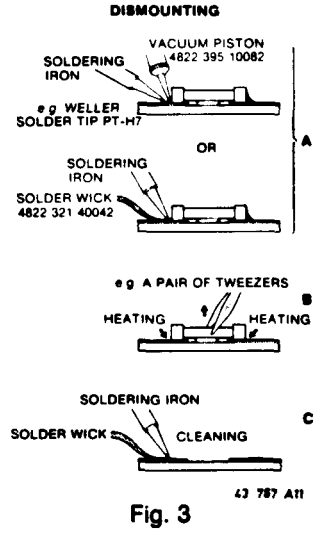


Fig. 3

**3.3 Befestigung Chips**

a. Zeitweilig ist ein einziger Anschluss des Chips mit der Kupferfolienfläche zu verlöten. Siehe Bild 4A.
b. Während ein Ende des Chips mit einer Pinzette festgehalten wird, sind beide Anschlüsse, einer nach dem anderen, vollständig zu verlöten. Siehe Bild 4B.

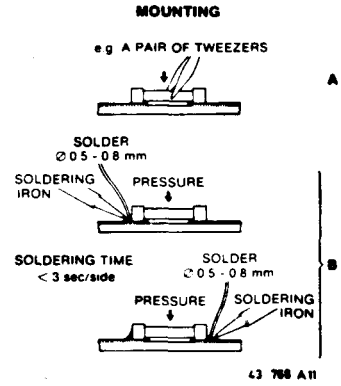


Fig.4

**Warnung bei Befestigung:**

a. Wenn Die Chipanschlüsse gelötet werden, dürfen sie nicht mit dem Lötkolben direkt berührt werden. Das Löten muss möglichst schnell erfolgen, es sei vorsichtig vorzugehen, damit die Anschlüsse und der Körper selbst keinen Schaden nehmen.
b. Den Körper des Chips muss beim Löten in Berührung mit der Printplatte gehalten werden.
c. Der zu verwendende Lötkolben (ca. 30 Watt) sollte vorzugsweise ausgestattet sein mit einer Wärmeregelung (Löttemperatur ca. 225 bis **250 °C).**
d. Der Lötvorgang soll nicht ausserhalb des spezifizierten Raums erfolgen.
e. Es darf Lötflussmittel (oder Harz) benutzt werden; **diese** Mittel dürfen nicht sauer sein.
f. Nach dem Löten den Chip nach und nach **bei** Raumtemperatur abkühlen lassen.
g. Die Zinnlotmenge soll zweckmässig sein: Mit einer Uebermenge kann der Chip rissig werden und andere Schwierigkeiten erfahren (Krümmung der Printplatte, geknickte Anschlüsse usw.). Siehe Bild 5.

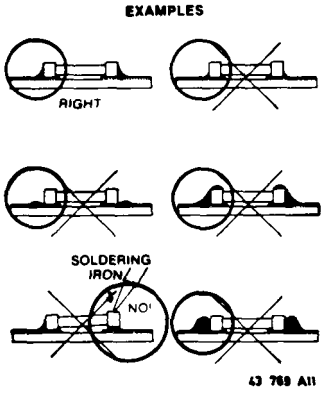


**Fig. 5**

**ELEKTRISCHE ANWEISUNGEN**

## A. EINSTELLUNGEN AN DER HAUPTPLATINE (Bild 1 1 )

**1. +148V-Versorgungsspannung**

Einen Gleichspannungsmesser über **C2631** anschliessen. Mit Potentiometer 3635 die Spannung auf +148 V regeln.

**2. Horizontale Synchronisierung**

Die Anschlüsse 5 und 9 von IC7470 miteinander verbinden. Ein Antennensignal zuführen und den Empfänger abstimmen. Potentiometer 3457 regeln, bis das Bild gerade steht. Die Durchverbindung beseitigen.

**3. Horizontale Zentrierung**

Wird mit Potentiometer 3461 eingestellt.

**4 Bildbreite**

Wird mit Potentiometer 3525 eingestellt.

**5. Vertikale Zentrierung**

Wird mit Schalter 7504 eingestellt.

**6. Bildhöhe**

Wird mit Potentiometer 3510 eingestellt.

**7. Fokussierung**

Wird mit dem Fokuspotentiometer in dem Zeilenausgangstransformator eingestellt **(siehe Bild 6).**

**8. AFC**

Einen Signalgeber (z.B. PM 5326) anschliessen, wie es in Bild 7 enthalten ist, und dessen Frequenz auf 38,9 MHz einstellen. Ein Voltmeter an Anschluss 15 von IC7020 schalten und mit 5034 auf 2,5 Volt (Gleichsp.) regeln. Dies ist nicht wirksam in System SECAM L'.

**9. AVR – HP (RF – AGC)**

Wenn das Bild eines starken Ortssenders verzerrt wiedergegeben wird, Potentiometer 3012 einstellen, bis das Bild unverzerrt ist.

**10. AVR – ZF (IP – AGC)**

Ein Generatorsignal (z.B. PM5515) einspeisen. Ein Oszilloskop an Anschluss 22 von IC7020 schalten und mit Potentiometer 3027 auf 2 Vss Video regeln.

**11. SECAM: "CIRCUIT CLOCHE"**

Ein Generatorsignal (z.B. PM5326) über Anschluss **20** des Eurokonnektors einspeisen und dessen Frequenz auf 4,286 MHz einstellen. Ein Oszilloskop (über eine 'probe' Ri s" 1Mß, C< 10 pF)über C2316 schalten und 5316 auf Höchstamplitude regeln.

**12. Der SECAM-Demodulator**

Ein SECAM-Schwarzrastersignal (z.B. PM5518-TX) einspeisen. Oszilloskop mit den Anschlüssen 11 und 12 von IC7315 verbinden. 5321 und 3321 dahin regeln, dass sich eine Mindestmodulation ergibt. Sodann ein SECAM-Farbbalkenmuster zuführen und 3321 ggf. dahin nachregeln, dass:
R-Y Amplitude an Anschluss 12 von IC7315 **= 1,26 V** ist;
**B-Y Amplitude an Anschluss 11 von IC7315 = 1,6 V ist.**

**13. Der Bilddemodulator**

a. Einen Signalgeber (z.B. PM5326) anschliessen wie **es** Bild 7 zeigt, und dessen Frequenz auf 38,9 MHz einstellen. Das Signal mit beispielsweise 1 kHz in Amplitude modulieren. Widerstand 3001 auf einer Seite loslöten (Speisespannung für den Tuner). Oszilloskop an Anschluss 22 von IC7020 schalten und 5035 auf ein Höchstsignal (unverzerrt) regeln. Dafür sorgen, dass der Demoduiator nicht übersteuert wird. Widerstand 3001 wieder anlöten.

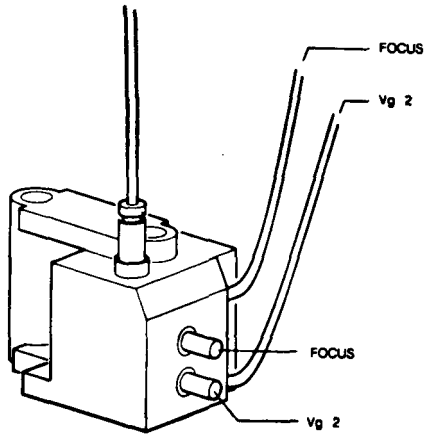


**Bild 6**

MDA.00633
T28/723

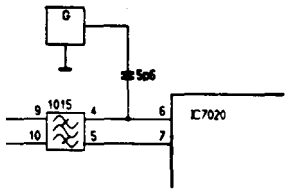


**Bild 7**

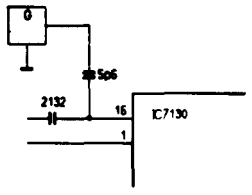


**Bild 8**

**b.*** Einen Signalgeber und ein Oszilloskop wie in 13.a angegeben anschliessen.
Den Empfänger im VHP Band 1 abstimmen und mittels der Systemtaste ((T)) **an der Ortstastatur in** System SECAM stellen.
5035 auf ein Höchstsignal (unverzerrt) regeln.
Jetzt umschalten in System PAL/SECAM B/G und den Signalgeber auf 38,9 MHz einstellen.
5036 auf ein Höchstsignal (unverzerrt) regeln.

**14. Der 'intercanier'-Demodulator**

Einen Signalgeber (z.B. PM5326) anschliessen wie es Bild 8 zeigt, und dessen Frequenz auf 38,9 MHz einstellen. Das Signal mit beispielsweise 1 kHz in Amplitude modulieren. Oszilloskop an Anschluss 12 von IC7130 schalten und 5132 auf Mindestamplitude regeln. Dafür sorgen, dass der Demodulator nicht übersteuert wird.

**15. ZF-Tontilter**

a. Widerstand 3001 auf einer Seite loslöten (Speisespannung für den Tuner). Einen Signalgeber (z.B. PM5326) über einen Kondensator mit einer Kapazität gleich 5,6 pF an Anschluss 16 des Tuners schalten, und dessen Frequenz auf 32,4 MHz (39,9 MHz)* einstellen. Das Signal mit beispielsweise 1 kHz in Amplitude modulieren.
System SECAM (und den Empfänger im VHP Band 1 abstimmen)' mit Hilfe der Systemtaste (fT)) an der Ortstastatur wählen. Oszilloskop an AnscRTuss **6 von** IC7130 schalten und 5052 und 5053 auf Höchstamplitude regeln. Widerstand 3001 **wieder** anlöten.

Wenn ein Hubgenerator ('sweepgenerator') vorhanden ist, lässt sich dieses Filter auch damit regeln. Zu den gleichen Bedingungen wie oben 5052 und 5053 dahin regeln, dass die Kurve A (siehe Bild 9) auf dem Oszilloskopschirm sichtbar ist. Nun das Gerät in die Stellung PAL/SECAM B/G schalten. Nun muss Kurve B (siehe Bild 9) auf dem Oszilloskopschirm sichtbar sein.

b.* Einen Signalgeber und ein Oszilloskop wie in 15.a angegeben anschliessen. Den Signalgeber auf 38,9 MHz einstellen. 5068 auf Mindestamplitude regeln.

**16*Ton Sperrfilter**

Einen Signalgeber (z.B. PM5326) über einen Kondensator (5,6pF) an Anschluss 16 des Tuners schalten, und dessen Frequenz auf 33,4 MHz einstellen.
Den Empfänger in System PAL/SECAM B/G stellen, una das Signal mit beispielsweise 1kHz Amplitude modulieren.
Ein Oszilloskop an Anschluss 22-IC7020 anschliessen und 5020 auf Mindestamplitude regeln.
Dafür sorgen, dass der Demodulator nicht übersteuert wird.

*** Extra Einstellungen nur gültig für "Multi France" Gerfite**

**B. EINSTELLUNGEN AM STEREO-TONMODUL (Bild 11)**

Anmerkung: Wo bei den Regelungen von einem Generatorsignal die Rede ist, wurde der Farbmustergenerator PM5515 eingesetzt.

**1. Der 5,5MHz-Tonteil**

Ein Generatorsignal (PAL oder SECAM B/G) einspeisen, dessen Tonträger mit einer Frequenz von beispielsweise 1 kHz frequenzmoduliert ist.
Den Generator in die Monostellung bringen und mit 5182 auf Mindeststöring im Ton regeln.
Oder mit einem Oszilloskop an Anschluss 4 von IC7170 (Oszilloskop in AC-Stelung) messen und mit 5182 auf Höchstamplitude regeln.

**2. Der 5,742MHz-Tonteil**

a. Ein Generatorsignal (PAL oder SECAM B/G) einspeisen mit zwei Tonträgern, deren Tonträger mit einer Frequenz (z.B. 1 kHz) moduliert sind und der zweite Tonträger mit dem Pilotsignal für die zweite Sprache versehen ist. Mit Hilfe der Fernbedienung für Sprache 2 wählen.
b. Dann 5183 auf Mindeststörung im Ton regeln.
Oder mit einem Oszilloskop an Anschluss 5 von IC7170 (Oszilloskop in AC-Stellung) messen und r, _ 5183 auf Höchstamplitude regeln.

**3. Pilottoneinstellung**

Ein Generatorsignal einspeisen wie in Punkt 2a. 5200 . dahin regeln, dass das Gerät richtig zwischen Sprache 1 und Sprache 2 umschaltet (Pilotton - 54,688 kHz).

**4. Stereomatrix**

Ein Generatorsignal einspeisen und den Generator in die Stereostellung bringen und die Taste R(M2) drücken. Oszilloskop an Anschluss 20 von IC7220 schalten und mit 3212 auf Mindestamplitude regeln.

**5. 117,5Hz-Aktivfilter (Stereofilter)**

Ein Generatorsignal einspeisen und den Generator in die Stereostellung bringen. Beide Tonträger sind unmoduliert. Oszilloskop an Anschluss 23 von IC7220 schalten und 3243 auf Höchstamplitude regeln.

**6. 274,1 Hz-Aktivfilter (Zweitsprachefilter)**

Ein Generatorsignal mit 2 Tonträgern einspeisen; die Tonträger sind unmoduliert (Generator in der DUAL-Stellung).
Oszilloskop an Anschluss 2 von IC7220 schalten unr 3245 auf Höchstamplitude regeln.

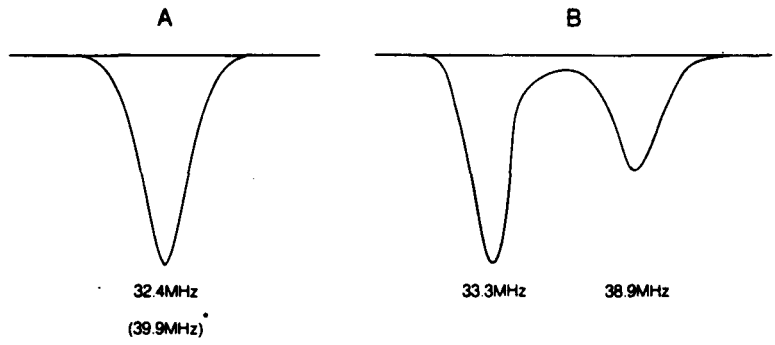


**Bild 9**

PRS 03992
T33/616

## C. EINSTELLUNGEN AM NICAM-TONMODUL (Bild 11)

**WARNUNG**
**NICAM-Eingangsfilter nicht an Position 1205 einstellen.**

**1. Tonteil 5,5 MHz oder 6,0 MHz**
Ein Generatorsignal (PM5515) einspeisen und den Generator in den Monobetrieb bringen. Tonträger **M1** ist met einer Frequenz von 1 kHz zu modulieren. 5075 auf Mindest-Interferenz im Ton einstellen, oder mit einem Oszilloskop an Anschluss 4 von IC7070 messen (Oszilloskop im Wechselstrombetrieb) und 5075 auf eine maximale Amplitude einstellen.

**2. Tonteil 5,742 MHz**
Ein Generatorsignal (PM5515) einspeisen und den Generator in den Dualbetrieb bringen. Tonträger M2 (R) ist mit einer Frequenz von 1 kHz zu modulieren. Mittels der Fernbedienung Sprache II am Gerät wählen. 5085 auf Mindest-Interferenz im Ton einstellen, oder mit einem Oziloskop an Anschluss 5 von IC707 messen (Oszilloskop im Wechselstrombetrieb) und 5085 auf Höchstamplitude einstellen.

**'S. Stereomatrix**
Ein Generatorsignal (PM5515) einspeisen und den Generator in den Stereobetrieb bringen. Tonträger M2 ist mit einer Frequenz von 1 kHz zu modulieren. Oszilloskop an Anschluss 14 von einkoppeln und 3105 auf Mindest-Amplitude einstellen.

**4. NICAM-Oemodulator**
Ein mit einem NICAM-Tonsignal versehenes Antennen- oder Generatorsignal einspeisen. Oszilloskop in X-Y Betrieb an die Anschlüsse 19 und 20 von IC7200 einkoppeln (es ist von keiner Bedeutung, welches Signal als X- oder als Y-Antrieb benutzt wird). Oszilloskop auf eine Empfindlichkeit (sowohl X wie Y) von 1 V/Div Wechselspannung einstellen. Die X- und Y- Position dahin einstellen, dass sich das Kreuzmuster in der Mitte des Oszilloskopbilds befindet.
2220 auf ein gerades Kreuzmuster (siehe Bild 10) einstellen.

**5. NICAM-Mustertaktoszlllator ('sample dock oscillator')**
Ein mit einem NICAM-Tonsignal versehenes Antennen- oder Generatorsignal einspeisen. Oszilloskop an Anschluss 9 von IC7300 einkoppeln. Oszilloskop auf eine Empfindlichkeit von 1 V/Div und eine Zeitbasis von 2 us/Div einstellen. 2315 auf eine stillstehende und symmetrische Rechteckwelle einstellen.

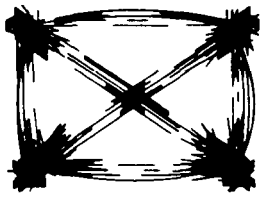

**Bild 10**

## D. EINSTELLUNGEN AN DER BILDRÖHRENPLATINE (Bild 11)

**1. Einstellung von Vg2**
Ein Schwarzrastersignal einspeizen. Oszilloskop mit den Anschlüssen 9 und 12 von IC7465 verbinden, messen und notieren, auf welchem Gleichspannungsniveau sich die Unterseite enes jeden Oszillogramms befindet. Das niedrigste Niveau mit dem Vg2 potentiometer (Bild 6) auf 125 V einstellen.

**2. Grauskala**
Ein Grauskala-Prüfmuster einspeisen und das Gerät in gewöhnlicher Weise einstellen. Das Gerät etwa 10 Minuten anheizen lassen. 3380 und 3384 regeln, bis die verlangte Grauskala erhalten worden ist.

## E. EINSTELLUNG AM VIDEOTEXTDECODER (Bild 11)

Anschluss 22 von IC7830 an Masse legen. Einen Frequenzmesser an Anschluss 17 von IC7830 schalten und 5803 auf 6,000 MHz ± 30 kHz regeln. Durchverbindung beseitigen.

**1001 CARRIER PANEL**

REMARKS

1) only for MULTI FRANCE sets
2) not for MULTI FRANCE sets
3) only for SECAM/PAL BG
4) not for SECAM/PAL BG
5) only for PAL BG
6) not for PAL BG
7) only for PAL BG NICAM
8) not for PAL BG NICAM
») only for PAL I
10) not for PAL I
11) only for PAL ITALY
12) not for PAL ITALY

Mechanical Darta

| | | |
|---|---|---|
| | 4822 492 63733 | spring fix. TDA1521 |
| | 4822 492 70143 | spring fix. transistor |
| 10 | 4822 265 30389 | 2p male degaussing |
| | 4822 264 40207 | 2p female degaussing |
| 11 | 4822 265 40596 | 2p male mains |
| | 4822 290 60626 | 2p female mains |
| 13 | 4822 265 30378 | 4p male |
| | 4822 267 50824 | 4p female |
| 14 | 4822 290 40295 | 7p male |
| | 4822 265 40252 | 7p female |
| 15 | 4822 265 40421 | 6p male |
| | 4822 267 30546 | 6p female |
| 16 | 4822 264 40207 | 3p male |
| | 4822 267 40794 | 3p female |
| 17 | 4822 267 50591 | 6p male gold plated |
| | 4822 265 40469 | 6p female gold plated |
| 18 | 482226450148 | 8p male gold plated |
| | 4822 265 40471 | 8p female gold plated |
| 19 | 4822 264 40239 | 3p male |
| | 4822 290 40284 | 3p female |
| 22 | 4822 267 40666 | 3p male |
| 23 | 4822 264 40207 | 3p male |
| | 4822 267 40794 | 3p female |
| 24 | 4822 267 40665 | 3p male |
| | 4822 290 40291 | 3p female |
| 25 | 4822 265 30437 | 3p male gold plated |
| 27 | 4822 265 40821 | 7p male |
| 31 | 482221820849 | foil keyboard |
| | 4822 410 26538 | knob assy 8 fold |
| 339) | 4822 277 10976 | mains switch |
| 33 10) | 4822 276 12445 | mains switch |
| 35 | 4822 267 20387 | socket SVHS |
| 36 | 4822 466 92299 | insulator 25X32mm |
| 39 | 4822 267 20355 | socket CVBS/AUDIO STEREO |
| 43 | 4822 256 30274 | fuse holder |
| 45 | 4822 273 30324 | switch SK4 |
| 48 | 4822 267 60243 | EURO-connector |
| 81 | 4822 535 30095 | eyelet 1,98X0,18X2,29mm |
| 82 | 4822 535 30096 | eyelet 1,52X0,18X2,23mm |
| | 482225691373 | holder TXT panel |
| | 482232020126 | focus cable |

Various parts

| | | |
|---|---|---|
| 10009) | 482221010364 | U944/L |
| 100010) | 482221010365 | UV816 |
| 1002 | 482252610405 | ferrite bead for D6630,D6640,D6641 |
| 1003 | 4822 212 22983 | infra red receiver |

Various p*arta*

| | | |
|---|---|---|
| 10151) | 482224272212 | filter OFWG3950 |
| 10155) | 4822 242 72495 | filter OFWG3251 |
| 10157) | 4822 242 72554 | filter OFWG3254 |
| 10159) | 4822 242 72553 | filter OFWJ3251 |
| 10163,11) | 4822 242 72374 | filter OFWG1961 |
| 10203,11) | 4822 242 72375 | filter OFWG9250 |
| 1030 10) | 4822 242 72211 | filter 5,5MHz |
| 1031 1) | 4822 15330025 | filter 6,OMHz |
| 1352 | 4822 242 70933 | crystal4,433619MHz |
| 1534 | 4822253 10074 | fuseTO,315A |
| 1559 | 4822253 10052 | fuse T1A |
| 1600 | 4822 253 30025 | fuse T2A |
| 1601 | 4822 253 10059 | fuse T0.630A |
| 1760 | 4822 242 70831 | crystal 4,0 MHz |

-C-

| | | |
|---|---|---|
| 2001 | 4822 12440195 | 150uF20%16V |
| 2002 | 4822 12231765 | 100pF5%50V |
| 2003 | 4822 12231765 | 100pF5%50V |
| 2004 | 4822 12233484 | 4,7nF 10% 63V |
| 2005 | 4822 12233496 | 100nF10%63V |
| 20063,11) | 4822 122 33484 | 4,7nF 10% 63V |
| 2007 | 482212233104 | 100nP 10% 63V |
| 2008 1) | 4822 12440433 | 47uF 20% 25V |
| 2009 | 4822 12440433 | 47uF 20% 25V |
| 20103,11) | 4822 12233484 | 4,7nF10%63V |
| 2013 | 4822 12440242 | 1uF20%63V |
| 2014 | 482212231797 | 22nF10%63V |
| 20161) | 4822 12232504 | 15pF5%50V |
| 2018 | 4822 12233484 | 4,7nP10%63V |
| 2019 1) | 482212231769 | 18pF5%50V |
| 2020 1) | 482212231774 | 56pF 5% 50V |
| 2021 1) | 4822 122 32504 | 15pF5%50V |
| 2022 | 4822 12233484 | 4,7nF 10% 63V |
| 2023 | 4822 12233484 | 4,7nF 10% 63V |
| 2024 | 5322 121 42498 | 680nF 5% 63V |
| 2030 1) | 4822 121 51252 | 470nF5%100V |
| 2031 9) | 482212231349 | 68pF2% 100V |
| 2032 9) | 482212231052 | 8,2pF3% 100V |
| 2033 | 482212233104 | 100nF 10% 63V |
| 2034 | 4822 122 33205 | 12pF10%63V |
| 2035 1) | 482212232083 | 8,2pF 5% 50V |
| 2036 1) | 482212233484 | 4,7nF 10% 63V |
| 2037 1) | 482212233484 | 4,7nF10%63V |
| 2039 | 482212440197 | 330uF 20% 16V |
| 2040 1) | 4822 12233484 | 4,7nF 10% 63V |
| 2041 | 4822 12233104 | 100nF10%63V |
| 2042 | 4822 121 42408 | 220nF 5% 63V |
| 2043 | 482212231797 | 22nF10%63V |
| 2044 | 482212233104 | 100nF 10% 63V |
| 2046 1) | 4822 12233484 | 4,7nF10%63V |
| 2047 1) | 4822 12233484 | 4,7nF 10% 63V |
| 2048 1) | 482212233465 | 39pF 2% |
| 2049 1) | 4822 12233465 | 39pF 2% |
| 2050 1) | 482212233471 | 12pF2% |
| 2051 1) | 4822 12232082 | 4,7pF 5% 50V |
| 2053 1) | 4822 12233679 | 120pF2%50V |
| 2054 1) | 482212231797 | 22nF10%63V |
| 2055 1) | 4822 12233476 | 220pF 2% 50V |
| 2056 1) | 4822 12233473 | 27pF 2% |
| 2057 1) | 4822 122 33469 | 10pF5% |
| 2058 1) | 482212233681 | 15pF2%50V |
| 2059 1) | 482212233471 | 12pF2% |
| 2068 1) | 4822 12232082 | 4,7pF 5% 50V |
| 2069 1) | 4822 12231825 | 27pF 10% 50V |

**1001 CARRIER PANEL**

| -C- | | | -C- | | |
|---|---|---|---|---|---|
| 2070 1) | 4822 122 33484 | 4,7nF 10% 63V | 2350 | 4822 124 40242 | 1pF20%63V |
| 2071 1) | 482212231797 | 22nF 10% 63V | 2351 | 482212233104 | 100nF10%63V |
| 2072 1) | 4822 12231797 | 22nF10%63V | 2352 | 4822 12232504 | 15pF 5% 50V |
| 2127 | 4822 12440195 | 150uF20%16V | 2353 | 482212233104 | 100nF 10% 63V |
| 21292,10) | 4822 12233484 | 4,7nF 10% 63V | 2355 | 4822 12231916 | 5,6nF 10% 63V |
| 213010) | 4822 12440435 | 10uF20%50V | 2356 | 482212233104 | 100nF 10% 63V |
| 2131 10) | 4822 12440246 | 4,7pF 20% 63V | 2357 | 4822 12232504 | 15pF 5% 50V |
| 2132 10) | 4822 122 33484 | 4,7nF 10% 63V | 2361 | 4822 12231797 | 22nF 10% 63V |
| 2133 10) | 4822 122 33496 | 100nF10%63V | 2362 | 4822 12231965 | 220pF 5% 63V |
| 2270 | 4822 12233104 | 100nF10%63V | 2363 | 4822 12233478 | 10nF 10% 63V |
| 2271 | 4822 12231797 | 22nF10%63V | 2364 | 482212233104 | 100nF 10% 63V |
| 2272 | 4822 12232597 | 6,8nF10%63V | 2365 | 4822 12232082 | 4,7pF 5% 50V |
| 2273 | 482212232597 | 6,8nF10%63V | 2366 | 482212233104 | 100nF10%63V |
| 2274 | 482212231797 | 22nF10%63V | 2367 | 482212231772 | 47pF 5% 50V |
| 2275 | 482212231797 | 22nF10%63V | 2369 | 532212440697 | 470MF20% 16V |
| 2276 | 4822 12231797 | 22nF 10% 63V | 2370 | 4822 12440193 | 68uF20% 16V |
| 2279 | 4822 12233104 | 100nF 10% 63V | 2371 | 4822 12233104 | 100nF 10% 63V |
| 2280 | 4822 12233104 | 100nF10%63V | 2372 | 482212233104 | 100nF10%63V |
| 2281 | 482212231797 | 22nF10%63V | 2373 | 4822 12233104 | 100nF 10% 63V |
| 2283 | 482212440197 | 330pF20% 16V | 2374 | 4822 12233104 | 100nF 10% 63V |
| 2285 | 4822 124 40207 | 100pF20%25V | 2375 | 4822 12233104 | 100nF 10% 63V |
| 2286 | 482212151252 | 470nF5%100V | 2378 | 4822 12231772 | 47pP 5% 50V |
| 2287 | 482212151252 | 470nF5% 100V | 2379 | 4822 12233104 | 100nF10%63V |
| 2290 | 4822 12441677 | 680^F 20% 25V | 2382 | 4822 12231797 | 22nF10%63V |
| 2291 | 482212441677 | 680\|JF 20% 25V | 2399 | 4822 12231765 | 100pF5%50V |
| 2293 | 4822 12422633 | 22yF 20% 35V | 2421 | 4822 12233104 | 100nF10%63V |
| 2301 | 4822 12233104 | 100nF10%63V | 2422 | 4822 12233104 | 100nF 10% 63V |
| 2302 | 482212233104 | 100nF10%63V | 2423 | 4822 12233104 | 100nF 10% 63V |
| 2303 | 5322 12231647 | 1nF10%63V | 2431 | 4822 121 51473 | 470nF 20% 63V |
| 2304 | 4822 12231797 | 22nF10%63V | 2432 | 4822 12233104 | 100nF 10% 63V |
| 2305 | 482212233478 | 10nF 10% 63V | 2433 | 482212231727 | 470pF 5% 63V |
| 2306 | 4822 121 41857 | 10nF5% 100V | 2434 | 4822 12233104 | 100nF10%63V |
| 2307 | 482212233104 | 100nF10%63V | 2435 | 4822 12233104 | 100nF10%63V |
| 23101,3) | 482212233104 | 100nF 10% 63V | 2436 | 4822 12231727 | 470pF 5% 63V |
| 2311 1,3) | 4822 124 40242 | 1^F 20% 63V | 2437 | 5322 12231844 | 330pF10%63V |
| 23121,3) | 4822 124 40242 | 1pF20%63V | 2438 | 482212231768 | 180pF5%50V |
| 23131,3) | 4822 12233104 | 100nF 10% 63V | 2439 | 482212231768 | 180pF5%50V |
| 23141,3) | 482212231765 | 100pF5%50V | 2440 | 482212231765 | 100pF5%50V |
| 23151,3) | 4822 12231775 | 680pF 5% 50V | 2441 | 4822 12231765 | 100pF5%50V |
| 23161,3) | 482212233481 | 1,8nF15% | 2442 | 4822 121 51252 | 470nF5% 100V |
| 23171,3) | 482212233104 | 100nF10%63V | 2443 | 4822 121 51252 | 470nF5% 100V |
| 23181,3) | 4822 12233104 | 100nF10%63V | 2445 | 4822 12233104 | 100nF 10% 63V |
| 2321 1,3) | 4822 122 33683 | 100pP5%63V | 2451 | 4822 12233496 | 100nF 10% 63V |
| 23221,3) | 482212232878 | 56pF 5% 50V | 2455 | 4822 12233478 | 10nF 10% 63V |
| 23231,3) | 482212233104 | 100nF10%63V | 2456 | 4822 12440246 | 4,7uF 20% 63V |
| 2324 1,3) | 4822 12233104 | 100nF10%63V | 2458 | 4822 121 42937 | 2,7nF 1%250V |
| 23251,3) | 482212231807 | 1200pF5%50V | 2459 | 482212233496 | 100nF10%63V |
| 23261,3) | 482212231807 | 1200pF5%50V | 2460 | 4822 12231771 | 390pF 5% 50V |
| 23271,3) | 482212232444 | 33pF 5% 50V | 2461 | 4822 12231797 | 22nP 10% 63V |
| 23281,3) | 482212232444 | 33pF 5% 50V | 2462 | 482212231768 | 180pF5%50V |
| 2330 | 4822 12233104 | 100nF 10% 63V | 2465 | 4822 12441545 | 220pF20%16V |
| 2331 | 482212233478 | 10nF 10% 63V | 2466 | 4822 12440753 | 6,8uF 20% 63V |
| 2332 | 5322 121 42661 | 330nF 5% 63V | 2467 | 4822 12233496 | 100nP 10% 63V |
| 2334 | 4822 12231965 | 220pF 5% 63V | 2468 | 4822 12440244 | 2,2pP 20% 63V |
| 2335 | 4822 121 51252 | 470nF5%100V | 2469 | 4822 12422633 | 22pF 20% 35V |
| 2337 | 5322 121 42386 | 100nF 5% 63V | 2470 | 482212231772 | 47pF 5% 50V |
| 2338 | 5322 121 42386 | 100nF 5% 63V | 2471 | 4822 121 41756 | 330nP10%63V |
| 2339 | 532^ 121 42386 | 100nF 5% 63V | 2473 | 4822 121 41756 | 330nF 10% 63V |
| •2340 | 482212440242 | IMF 20% 63V | 2475 | 482212231797 | 22nF 10% 63V |
| 2341 | 482212233104 | 100nF10%63V | 2476 | 482212440242 | 1HF20%63V |
| 2342 | 4822 12233104 | 100nF10%63V | 2500 | 482212233637 | 220pF 10% 50V |
| 2343 | 4822 12231965 | 220pF 5% 63V | 2505 | 4822 12232542 | 47nF 10% 63V |
| 2344 | 4822 12233104 | 100nP10%63V | 2506 | 482212441684 | 470uF 20% 35V |
| 2345 | 482212233104 | 100nF 10% 63V | 2509 | 4822 12440244 | 2,2pF 20% 63V |
| 2346 | 5322 121 42386 | 100nF 5% 63V | 2520 | 4822 12441718 | 68pF 20% 40V |
| 2349 | 4822 12440753 | 6.8MF 20% 63V | 2521 | 4822 121 41839 | 390nF10%63V |

-C-

| | | |
|---|---|---|
| 2526 | 5322 12231648 | 12nF 10% 50V |
| 2531 | 4822 121 51409 | 120nF 5% 63V |
| 2532 | 4822 12440242 | 1HF20%63V |
| 2533 | 4822 124 40242 | 1 uF 20% 63V |
| 2542 | 5322 12232332 | 1,5nF 10% 100V |
| 2544 | 5322 121 42578 | 100nF5% 100V |
| 2545 | 4822 12233707 | 1,2nF 10% 2kV |
| 2546 | 5322 121 42523 | 8,2nF 5% 2kV |
| 2547 | 4822 121 40516 | 22nF10%250V |
| 2549 | 4822 121 42073 | 390nF10%400V |
| 2550 | 4822 121 40479 | 390nF10%250V |
| 2551 | 482212422417 | 0,47uF20%160V |
| 2560 | 4822 121 40336 | 47nF10%250V |
| 2570 | 4822 12440804 | 22^F 20% 63V |
| 2574 | 482212210175 | 2,2nF 10% 50V |
| 2573 | 5322 12422229 | 1000uF20%35V |
| 2580 | 4822 12440201 | 1000uF20%16V |
| 2585 | 482212440435 | 10uF20%50V |
| 2588 | 482212233498 | 2,7nF 10% 63V |
| 2590 | 5322 121 42498 | 680nF 5% 63V |
| 2593 | 4822 12440435 | 10uF20%50V |
| 2594 | 4822 124 40435 | 10pF20%50V |
| 2600 | 4822 12441531 | 470nF 10% 250V |
| 2601 | 4822 121 40487 | 100nF10%400V |
| 2605 | 4822 12441608 | 220uF 20% 385V |
| 2606 | 482212610157 | 33pF10%400V |
| 2607 | 4822 12233922 | 1nF20%400V |
| 2611 | 4822 12233637 | 220pF 10% 50V |
| 2614 | 482212231808 | 150pF 10% 50V |
| 2617 | 5322 121 42498 | 680nF 5% 63V |
| 2620 | 4822 121 51349 | 68nF 5% 63V |
| 2625 | 482212240592 | 1,5nF5% 1kV |
| 2630 | 482212441056 | 47pF 50% 200V |
| 2631 | 482212441056 | 47MP 50% 200V |
| 2632 | 4822 12233708 | 2,2nF10% 1kV |
| 2635 | 4822 12233478 | 10nF10%63V |
| 2636 | 4822 121 41839 | 390nF 10% 63V |
| 2637 | 482212231797 | 22nF10%63V |
| 2640 | 482212440214 | 1000pF20%25V |
| 2641 | 4822 12440214 | 1000uF20%25V |
| 2645 | 482212141719 | 1pF10%100V |
| 2650 | 4822 121 42411 | 82nF2%100V |
| 2651 | 4822 12233483 | 33nF 10% 63V |
| 2654 | 482212210175 | 2,2nF10%50V |
| 2655 | 5322 122 32838 | 82np 10% 63V |
| 2656 | 5322 122 32838 | 82nF 10% 63V |
| 2658 | 5322 122 32838 | 82nF10%63V |
| 2659 | 5322 121 42661 | 330nF 5% 63V |
| 2660 | 482212441677 | 680uF 20% 25V |
| 2661 | 4822 124 40433 | 47nF 20% 25V |
| 2670 | 482212231766 | 120pF5%50V |
| 2671 | 482212233104 | 100nF 10% 63V |
| 2702 | 4822 12233205 | 12pF10%63V |
| 2705 | 482212233104 | 100nF 10% 63V |
| 2709 | 482212233104 | 100nF 10% 63V |
| 2714 | 482212233104 | 100nF 10% 63V |
| 2724 | 4822 12233498 | 2,7nF10%63V |
| 2739 | 482212231766 | 120pF5%50V |
| 2740 | 482212231766 | 120pF5%50V |
| 2750 | 482212231825 | 27pF10%50V |
| 2757 | 4822 12233478 | 10nF 10% 63V |
| 2758 | 4822 12233205 | 12pF10%63V |
| 2759 | 482212233478 | 10nF10%63V |
| 2760 | 482212231825 | 27pF10%50V |
| 2761 | 482212231825 | 27pF 10% 50V |
| 2766 | 482212440207 | 100MF20%25V |

-H-

| | | |
|---|---|---|
| 2775 | 4822 122 33496 | 100nF 10% 63V |
| 2860 | 4822 12231765 | 100pF5%50V |
| 2870 | 4822 12232142 | 270pF 5% 63V |
| 2871 | 4822 121 51252 | 470nF 5% 100V |
| 2872 | 4822 121 43079 | 4,7nF5%100V |
| 2873 | 482212232142 | 270pF 5% 63V |
| 2874 | 4822 121 43079 | 4,7nF5% 100V |
| 2875 | 4822 12232142 | 270pF 5% 63V |
| 2876 | 482212231965 | 220pF 5% 63V |
| 2877 | 4822 12232444 | 33pF 5% 50V |
| 2878 | 482212231972 | 39pF 5% 50V |
| 2879 | 4822 12231972 | 39pF 5% 50V |
| 2880 | 482212231965 | 220pF 5% 63V |
| 2881 | 482212231965 | 220pF 5% 63V |
| 2882 | 482212232142 | 270pF 5% 63V |

-R-

| | | |
|---|---|---|
| 3001 | 4822111 30519 | 27R 5% 0.33W |
| 3002 | 48221 1 190251 | 22k 2% 0.25W |
| 3003 | 4822 1165°461 | 18k5%0,5W |
| 3004 | 4822 11652461 | 18k5%0,5W |
| 3005 | 5322 111 90092 | 1k2%0,25W |
| 3006 1) | 4822111 90163 | jumper |
| 3006 2) | 53221 1 190091 | 100R2%0,25W |
| 3007 1) | 48221 1 190163 | jumper |
| 3007 2) | 53221 1 190091 | 100R2%0,25W |
| 3009 | 4822 1 1 190572 | 5k6 2% 0.25W |
| 3010 | 4822 111 90542 | 27k 2% 0.25W |
| 3011 | 48221 1 190214 | 100k2%0,25W |
| 3012 | 48221 0011163 | 100k30%linO,1W |
| 3013 1,7,9) | 4822 1 1 1 90214 | 100k2%0,25W |
| 30132,8,10 | 5322 1 1 1 90108 | 39k 2% 0,25W |
| 3014 | 4822 1 1 1 90253 | 12k2%0,25W |
| 3015 1) | 48221 1 190178 | 220R 2% 0.25W |
| 30152) | 4822 1 1 190163 | jumper |
| 3016 1) | 4822 11652289 | 5k6 5% 0,5W |
| 3017 1) | 4822 1 1 190572 | 5k6 2% 0,25W |
| 3021 9) | 4822 1 1 1 90569 | 2K7 2% 0.25W |
| 3021 10) | 4822 1 1 190249 | 10k2%0,25W |
| 3022 | 4822 1 1 190575 | 82k 2% 0,25W |
| 3023 | 48221 1 190157 | 3k3 2% 0.25W |
| 3024 | 4822 111 90171 | 820R 2% 0.25W |
| 3025 1) | 4822 1 1 1 90162 | 680R 2% 0,25W |
| 3026 1) | 4822111 90238 | 180k2%0,25W |
| 3027 1) | 4822 10011088 | 5k30%lin 0,1 W |
| 3028 1) | 5322 111 90101 | 1k82%0,25W |
| 3029 1) | 4822 111 90569 | 2k7 2% 0,25W |
| 3030 1) | 4822 11652291 | 56k 5% 0,5W |
| 3031 1) | 5322 1 1 190091 | 100R2%0,25W |
| 3031 9) | 5322 111 90096 | 1k22%0,25W |
| 3031 2,10) | 5322 1 1 1 90098 | 150R2%0,25W |
| 3035 1) | 53221 1 190109 | 470R 2% 0.25W |
| 30352,10) | 5322 111 90092 | 1k2%0,25W |
| 3036 9) | 5322 111 90111 | 4k7 2% 0.25W |
| 3037 1) | 4822 1 1 190248 | 2k2 2% 0.25W |
| 3038 1) | 482211652256 | 2k2 5% 0.5W |
| 3039 1) | 48221 1 190571 | 3k9 2% 0.25W |
| 3040 | 4822 111 90542 | 27k 2% 0.25W |
| 3041 | 4822 111 90543 | 47k 2% 0.25W |
| 3043 1) | 5322 111 90092 | 1 k 2% 0.25W |
| 3043 2) | 48221 1 190154 | 270R 2% 0.25W |
| 3044 | 4822 11652199 | 68R 5% 0,5W |
| 3045 | 4822 11652215 | 220R 5% 0,5W |
| 3047 1) | 5322 111 90096 | 1k22%0,25W |
| 3047 2) | 53221 1 190109 | 470R 2% 0.25W |

**1001 CARRIER PANEL**

| -CD- | | | •CD- | | |
|---|---|---|---|---|---|
| 30481) | 4822111 90214 | 100k 2% 0.25W | 33281,3) | 5322 111 90092 | 1k2%0,25W |
| 3049 | 4822111 90238 | 180k2%0,25W | 3329 1,3) | 4822 11 190251 | 22k 2% 0.25W |
| 3052 | 5322111 90106 | 330R 2% 0.25W | 3330 | 4822 11652175 | 100R5%0,5W |
| 3053 1) | 48221 1 190163 | jumper | 3331 | 48221 1 190163 | jumper |
| 30551) | 48221 1 190248 | 2k2 2% 0.25W | 3334 | 4822 11652234 | 100k5%0,5W |
| 3056 | 4822 111 90569 | 2k7 2% 0.25W | 3346 | 4822111 90151 | 1k52%0,25W |
| 3058 1) | 48221 1 190214 | 100k2%0,25W | 3347 | 48221 1 190249 | 10k2%0,25W |
| 3060 | 482211652224 | 470R 5% 0.5W | 3348 | 4822 1 1 190178 | 220R 2% 0.25W |
| 3080 1) | 4822111 90163 | jumper | 3349 | 5322 111 90111 | 4k7 2% 0.25W |
| 3081 | 4822111 90163 | jumper | 3350 | 4822111 90163 | jumper |
| 3082 9) | 4822111 90163 | jumper | 3351 | 48221 1 190163 | jumper |
| 3085 2) | 48221 1 190163 | jumper | 3352 | 4822111 90165 | 2k 2% 0.25W |
| 3086 1) | 4822111 90163 | Jumper | 3354 | 5322 111 90092 | 1 k 2% 0,25W |
| 3087 | 4822111 90163 | jumper | 3356 | 4822 111 90238 | 180k2%0,25W |
| 3088 1) | 4822111 90163 | jumper | 3361 | 4822 1 1 190569 | 2k7 2% 0.25W |
| 3089 | 4822111 90163 | jumper | 3362 | 4822 1 1 190249 | 10k2%0,25W |
| 3096 | 48221 1 190163 | jumper | 3363 | 5322 111 90101 | 1k82%0,25W |
| 3128 | 4822111 30522 | 33R 5% 0.33W | 3364 | 4822 111 90572 | 5k6 2% 0.25W |
| 3131 1) | 48221 1 190513 | 330k 2% 0,25W | 3365 | 4822111 90198 | 3k 2% 0.25W |
| 31597,9) | 48221 1 130508 | 10R5%0,33W | 33661,3) | 4822 1 1 190573 | 56k 2% 0,25W |
| 31598,10) | 48221 1 130517 | 22R 5% 0.33W | 3367 1,3) | 4822 1 1 190543 | 47k 2% 0.25W |
| 3207 | 5322 111 90111 | 4k7 2% 0.25W | 3368 1,3) | 4822111 30513 | 15R5%0,33W |
| 3210 | 5322111 90111 | 4k7 2% 0,25W | 3368 2,4) | 48221 1 130517 | 22R 5% 0.33W |
| 3223 | 532211190096 | 1k22%0,25W | 33691,3) | 4822111 30513 | 15R5%0,33W |
| 3224 | 532211190096 | 1k22%0,25W | 3369 2,4) | 48221 1 130515 | 18R5%0,33W |
| 3270 | 5322111 90092 | 1k2%0,25W | 3421 | 4822 111 90253 | 12k2%0,25W |
| 3271 | 48221 1 130506 | 8R2 5% 0.33W | 3422 | 48221 1 190157 | 3k3 2% 0.25W |
| 3272 | 482211652219 | 330R 5% 0,5W | 3424 | 4822111 90248 | 2k2 2% 0.25W |
| 3274 | 4822111 30506 | 8R2 5% 0.33W | 3425 | 482211653025 | 2k2 1% 0,6W |
| 3275 | 482211652219 | 330R 5% 0.5W | 3426 | 48221 1 190248 | 2k2 2% 0.25W |
| 3277 | 48221 1 190163 | jumper | 3427 | 48221 1 190217 | 47R 2% 0.25W |
| 3279 | 4822 1 1 190202 | 68k 2% 0.25W | 3431 | 48221 1 190251 | 22k 2% 0.25W |
| 3280 | 4822111 90202 | 68k 2% 0.25W | 3432 | 5322 111 90096 | 1k22%0,25W |
| 3281 | 482211652207 | 1k25%0,5W | 3433 | 5322 111 90242 | 180R2%0,25W |
| 3282 | 4822 111 90202 | 68k 2% 0.25W | 3434 | 482211652391 | 1k5%0,5W |
| 3283 | 5322111 90096 | 1k22%0,25W | 3435 | 482211652391 | 1k5%0,5W |
| 3284 | 4822111 90249 | 10k 2% 0.25W | 3436 | 53221 1 190091 | 100R2%0,25W |
| 3285 | 4822111 90249 | 10k 2% 0.25W | 3437 | 53221 1 190091 | 100R 2%0,25W |
| 3286 | 48221 1 190163 | jumper | 3451 | 48221 1 190248 | 2k2 2% 0.25W |
| 3287 | 4822111 90163 | jumper | 3453 | 482211652269 | 3k3 5% 0.5W |
| 3288 | 4822111 90249 | 10k2%0,25W | 3454 | 4822111 90178 | 220R 2% 0.25W |
| 3289 | 48221 1 190544 | 6k8 2% 0.25W | 3455 | 5322111 90111 | 4k7 2% 0.25W |
| 3292 | 48221 1 190163 | jumper | 3456 | 4822 1 1 190544 | 6k8 2% 0.25W |
| 3293 | 4822 111 90151 | 1k52%0,25W | 3457 | 482210020166 | 10k 30% lin 0,1 W |
| 3294 | 4822111 90571 | 3k9 2% 0.25W | 3458 | 48221 1 190216 | 30k 2% 0.25W |
| 3295 | 48221 1 190163 | jumper | 3459 | 4822111 90417 | 2M7 5% 0.25W |
| 3296 | 4822111 90249 | 10k2%0,25W | 3460 | 48221 1 190568 | 120k2%0,25W |
| 3297 | 4822 1 1 190543 | 47k 2% 0.25W | 3462 | 48221 1 190542 | 27k 2% 0.25W |
| 3298 | 48221 1 190409 | 1M25%0,25W | 3463 | 48221 1 190238 | 180k2%0,25W |
| 3299 | 482211681002 | 91 OR 5% 1W | 3464 | 48221 1 190251 | 22k 2% 0.25W |
| 3301 | 4822111 90163 | jumper | 3465 | 4822 1 1 190205 | 820k 2% 0.25W |
| 3302 | 48221 1 190163 | jumper | 3466 | 5322 111 90096 | 1k22%0,25W |
| 3303 | 5322 111 90092 | 1k2%0,25W | 3468 | 4822 111 90544 | 6k8 2% 0.25W |
| 3304 | 4822111 90163 | jumper ^ | 3469 | 48221 1 190186 | 22R 2% 0.25W |
| 3305 | 4822111 90163 | jumper | 3470 | 48221 1 190157 | 3k3 2% 0.25W |
| 33061,3) | 48221 1 190163 | jumper | 3471 | 4822 11652242 | 130k5%0,5W |
| 3311 | 4822111 90162 | 680R 2% 0.25W | 3472 | 482210011465 | 200k 30% lin |
| 3313 | 48221 1 190417 | 2M7 5% 0.25W | 3473 | 4822 11652258 | 220k 5% 0,5W |
| 33141,3) | 4822 111 90171 | 820R 2% 0.25W | 3474 | 4822 111 90151 | 1k52%0,25W |
| 3315 | 4822111 90178 | 220R 2% 0.25W | 3475 | 48221 1 190162 | 680R 2% 0,25W |
| 3317 | 4822111 90163 | jumper | 3476 | 4822 111 90572 | 5k6 2% 0.25W |
| 33181,3) | 48221 1 190249 | 10k2%0,25W | 3477 | 482211652264 | 27k 5% 0,5W |
| 3320 | 48221 1 190163 | jumper | 3478 | 48221 1 190163 | jumper |
| 3321 1,3) | 482210020165 | 500R 30% lin 0,1W | 3500 | 4822111 90253 | 12k2%0,25W |
| 33221,3) | 48221 1 190162 | 680R 2% 0.25W | 3501 | 482211652199 | 68R 5% 0,5W |
| 3327 1,3) | 5322 1 1 190092 | 1k2%0,25W | 3502 | 4822 11681005 | 8k2 5% 3W |

CHASSIS G110SVHS

1001 CARRIER PANEL

| -R- | | |
|---|---|---|
| 3503 | 482211652339 | 1R55%0,5W |
| 3505 | 53221 1 190109 | 470R 2% 0.25W |
| 3506 | 48221 1 190215 | 240k 2% 0.25W |
| 3507 | 4822 111 90253 | 12k2%0,25W |
| 3508 | 5322111 90104 | 2R2 5% 0.25W |
| 3509 | 53221 1 190104 | 2R2 5% 0.25W |
| 3510 | 53221 1 190104 | 2R2 5% 0.25W |
| 3511 | 53221 1 190104 | 2R2 5% 0.25W |
| 3512 | 4822 11652249 | 1k8 5% 0.5W |
| 3514 | 48221 1 190571 | 3k9 2% 0.25W |
| 3515 | 48221 1 190184 | 1 R 5% 0.25W |
| 3518 | 48221 1 190154 | 270R 2% 0.25W |
| 3519 | 48221 1 190154 | 270R 2% 0.25W |
| 3520 | 4822111 90162 | 680R 2% 0.25W |
| 3521 | 4822 10011088 | 5k 30% lin 0,1 W |
| 3522 | 4822 111 90151 | 1k52%0,25W |
| 3523 | 53221 1 190104 | 2R2 5% 0.25W |
| 3524 | 48221 1 190202 | 68k 2% 0.25W |
| 3525 | 482210020166 | 10k 30% lin 0,1 W |
| 3526 | 48221 1 190573 | 56k 2% 0.25W |
| 3527 | 4822 111 90409 | 1M25%0,25W |
| 3528 | 48221 1 190248 | 2k2 2% 0.25W |
| 3529 | 53221 1 190104 | 2R2 5% 0.25W |
| 3530 | 5322111 90092 | 1k2%0,25W |
| 3531 | 4822111 90214 | 100k2%0,25W |
| 3532 | 4822 111 90249 | 10k2%0,25W |
| 3535 | 48221 1 190163 | Jumper |
| 3540 | 482211652186 | 22R 5% 0.5W |
| 3542 | 4822 11652269 | 3k3 5% 0,5W |
| 3544 | 482211653418 | 2k7 10% 5W |
| 3545 | 48221 1 190124 | 82R 2% 0.25W |
| 3550 | 482211681815 | 15k5%0,5W |
| 3551 | 4822 11652226 | 560R 5% 0,5W |
| 3552 | 4822 11652226 | 560R 5% 0,5W |
| 3554 | 482211652226 | 560R 5% 0,5W |
| 3560 | 482211652254 | 20k 5% 0,5W |
| 3570 | 4822111 30513 | 15R 5%0,33W |
| 3575 | 482211680543 | 2R7 5% 0,5W |
| 3577 | 4822 11680543 | 2R7 5% 0,5W |
| 3578 | 482211652226 | 560R 5% 0,5W |
| 3580 | 4822 1 1 30483 | 1 R 5% 0.33W |
| 3581 | 4822 1 1 30483 | 1R5%0,33W |
| 3582 | 4822 11652226 | 560R 5% 0,5W |
| 3583 | 4822111 30515 | 18R5%0,33W |
| 3585 | 4822 111 30513 | 15R 5% 0.33W |
| 3588 | 482211652398 | 150R 5% 0,5W |
| 3589 | 482211652398 | 150R5%0,5W |
| 3590 | 48221 1 190214 | 100k2%0,25W |
| 3591 | 4822 111 90161 | 470k 2% 0,125W |
| 3592 | 48221 1 190162 | 680R 2% 0.25W |
| 3593 | 4822 111 30483 | 1R5%0,33W |
| 3594 | 4822 1 1 30483 | 1R5%0,33W |
| 3595 | 482210511023 | 1k 30% 0,1 W |
| 3596 | 48221 1 130513 | 15R5%0,33W |
| 3597 | 4822111 90163 | jumper |
| 3598 | 53221 1 190106 | 330R 2% 0.25W |
| 3601 | 482211640033 | NTC/PTC |
| 3603 | 482211682077 | 9M1 1%0,5W |
| 3605 | 4822111 30561 | 1k5%0,33W |
| 3606 | 4822 1 1 30561 | 1k5%0,33W |
| 3608 | 5322 111 90274 | 51k2%0,25W |
| 3609 | 4822111 90574 | 75k 2% 0.25W |
| 3610 | 53221 1 190274 | 51k2%0,25W |
| 3611 | 4822 111 90569 | 2k7 2% 0.25W |
| 3613 | 48221 1 190543 | 47k 2% 0.25W |
| 3615 | 4822111 90178 | 220R 2% 0.25W |

| -R- | | |
|---|---|---|
| 3616 | 53221 1 190091 | 100R2%0,25W |
| 3617 | 48221 1 190178 | 220R 2% 0.25W |
| 3618 | 482211652297 | 68k 5% 0.5W |
| 3619 | 5322 111 90095 | 10R2%0,25W |
| 3620 | 4822 11652193 | 39R 5% 0.5W |
| 3621 | 4822 11652193 | 39R 5% 0.5W |
| 3622 | 48221 1 190365 | 51R2%0,25W |
| 3623 | 48221 1 190365 | 51 R 2% 0.25W |
| 3624 | 48221 1 190214 | 100k 2% 0.25W |
| 3625 | 4822 11652193 | 39R 5% 0.5W |
| 3626 | 48221 1 190214 | 100k2%0,25W |
| 3631 | 4822 11681435 | 120k1%0,4W |
| 3633 | 5322111 90113 | 560R 2% 0.25W |
| 3634 | 5322 111 90111 | 4k7 2% 0.25W |
| 3635 | 4822 10011348 | 1k 30% lin |
| 3636 | 5322 111 90113 | 560R 2% 0.25W |
| 3647 | 5322 11653473 | 1k11%0,6W |
| 3648 | 4822 111 90171 | 820R 2% 0,25W |
| 3649 | 4822 111 90186 | 22R 2% 0.25W |
| 3650 | 482211681621 | 82R 5% 2W |
| 3651 | 5322 111 90096 | 1k22%0,25W |
| 3652 | 48221 1 190178 | 220R 2% 0.25W |
| 3653 | 53221 1 190091 | 100R 2%0,25W |
| 3654 | 4822 11681622 | 180R5%2W |
| 3655 | 48221 1 190543 | 47k 2% 0.25W |
| 3656 | 4822 111 90543 | 47k 2% 0.25W |
| 3658 | 48221 1 190163 | jumper |
| 3659 | 5322 111 90242 | 180R2%0,25W |
| 3660 | 4822 1 1 190572 | 5k6 2% 0.25W |
| 3661 | 5322 111 90242 | 180R2%0,25W |
| 3662 | 5322 1 1 190098 | 150R2%0,25W |
| 3663 | 5322111 90091 | 100R2%0,25W |
| 3664 | 53221 1 190091 | 100R2%0,25W |
| 3665 | 48221 1 190249 | 10k2%0,25W |
| 3666 | 4822111 90163 | jumper |
| 3667 | 48221 1 190163 | jumper |
| 3668 | 4822 1 1 190542 | 27k 2% 0.25W |
| 3669 | 4822 1 1 190202 | 68k 2% 0.25W |
| 3670 | 482211652267 | 30k 5% 0,5W |
| 3671 | 5322 111 90092 | 1k2%0,25W |
| 3672 | 48221 1 190249 | 10k2%0,25W |
| 3673 | 5322 111 90101 | 1k82%0,25W |
| 3674 | 4822 1 1 190163 | jumper |
| 3675 | 4822111 90163 | jumper |
| 3676 | 48221 1 190163 | jumper |
| 3701 | 5322 111 90113 | 560R 2% 0.25W |
| 3702 | 482211652175 | 100R5%0,5W |
| 3703 | 482211652175 | 100R 5% 0,5W |
| 3704 | 4822 11652175 | 100R5%0,5W |
| 3705 | 48221 1 190253 | 12k 2% 0.25W |
| 3706 | 5322 111 90111 | 4k7 2% 0.25W |
| 3707 | 5322 111 90111 | 4k7 2% 0.25W |
| 3709 | 4822 111 90373 | 9k1 2% 0.25W |
| 3710 | 4822 111 90542 | 27k 2% 0.25W |
| 3711 | 5322 111 90111 | 4k7 2% 0.25W |
| 3714 | 48221 1 190182 | 390k 2% 0.25W |
| 3715 | 4822 111 90205 | 820k 2% 0.25W |
| 3716 | 48221 1 190197 | 220k 2% 0.25W |
| 3719 | 48221 1 190163 | jumper |
| 3721 | 4822111 90163 | jumper |
| 3722 | 48221 1 190163 | jumper |
| 3723 | 48221 1 190163 | jumper |
| 3724 | 48221 1 190163 | jumper |
| 3729 | 48221 1 190249 | 10k 2% 0.25W |
| 3730 | 48221 1 190178 | 220R 2% 0.25W |
| 3731 | 4822 11652234 | 100k5%0,5W |

**1001 CARRIER PANEL**

-R-

| | | |
|---|---|---|
| 3732 | 4822 1 1 1 90251 | 22R 2% 0.25W |
| 3733 | 4822 1 1 1 90249 | 10k 2% 0.25W |
| 3734 | 5322 1 1 1 90267 | 33k 2% 0.25W |
| 3735 | 4822 111 90249 | 10k2%0,25W |
| 37361) | 4822 1 1 1 90249 | 10k2%0,25W |
| 3737 1) | 4822111 90249 | 10k2%0,25W |
| 3738 1) | 4822111 90249 | 10k 2% 0,25W |
| 3739 | 482211652303 | 8k2 5% 0,5W |
| 3742 | 4822 1 1 1 90372 | 910R2%0,25W |
| 3743 | 4822 1 1 1 90569 | 2k7 2% 0.25W |
| 3744 | 4822111 90569 | 2k7 2% 0,25W |
| 3745 | 4822 111 90569 | 2k7 2% 0.25W |
| 3750 | 5322 111 90092 | 1k2%0,25W |
| 3751 | 4822 11652215 | 220R 5% 0,5W |
| 3753 | 4822 111 90253 | 12k2%0,25W |
| 3754 | 4822 1 1 1 90542 | 27k 2% 0,25W |
| 3757 | 4822 1 1 1 90253 | 12k2%0,25W |
| 3758 | 4822 1 1 1 90543 | 47k 2% 0,25W |
| 3763 | 4822 111 90572 | 5k6 2% 0.25W |
| 3764 | 4822111 90249 | 10k2%0,25W |
| 3765 | 4822 1 1 1 90214 | 100k2%0,25W |
| 3766 | 4822 1 1 1 90214 | 100k2%0,25W |
| 3767 | 4822 1 1 1 90251 | 22k 2% 0.25W |
| 3768 | 4822 111 90544 | 6k8 2% 0.25W |
| 3769 | 5322111 90111 | 4k7 2% 0,25W |
| 3770 | 4822 1 1 1 90249 | 10k 2% 0.25W |
| 3772 | 4822 1 1 1 90248 | 2k2 2% 0.25W |
| 3773 | 482211652175 | 100R5%0,5W |
| 3776 | 4822 11652175 | 100R5%0,5W |
| 3777 | 4822111 90248 | 2k2 2% 0.25W |
| 3778 | 4822 1 1 1 90157 | 3k3 2% 0.25W |
| 3780 1) | 4822111 90178 | 220R 2% 0.25W |
| 3781 1) | 4822111 90178 | 220R 2% 0.25W |
| 3782 | 4822 1 1 1 90163 | jumper |
| 3783 | 4822 1 1 1 90163 | jumper |
| 3784 | 4822111 90163 | jumper |
| 3789 | 4822 1 1 1 90163 | jumper |
| 3790 | 4822111 90163 | jumper |
| 3844 | 482211652219 | 330R 5% 0.5W |
| 3850 | 4822 11652219 | 330R 5% 0,5W |
| 3851 | 4822 11652201 | 75R 5% 0,5W |
| 3852 | 4822 11652219 | 330R 5% 0,5W |
| 3853 | 4822 11652201 | 75R 5% 0.5W |
| 3854 | 4822 1 1 1 90248 | 2k2 2% 0.25W |
| 3855 | 482211652219 | 330R 5% 0.5W |
| 3856 | 4822 11652201 | 75R 5% 0.5W |
| 3857 | 4822 11652215 | 220R 5% 0.5W |
| 3859 | 4822 111 90569 | 2k7 2% 0.25W |
| 3860 | 53221 1 1 90106 | 330R 2% 0.25W |
| 3861 | 4822 111 90544 | 6k8 2% 0.25W |
| 3862 | 4822 1 1 1 90544 | 6k8 2% 0.25W |
| 3863 | 482211652264 | 27k 5% 0.5W |
| 3866 | 4822 11652199 | 68R 5% 0,5W |
| 3867 | 5322 111 90111 | 4k7 2% 0.25W |
| 3872 | 4822111 90542 | 27k 2% 0.25W |
| 3873 | 4822 1 1 1 90253 | 12k2%0,25W |
| 3874 | 4822111 90571 | 3k9 2% 0.25W |
| 3877 | 4822 11652213 | 180R5%0,5W |
| 3878 | 5322 111 90113 | 560R 2% 0.25W |
| 3879 | 482211652213 | 180R5%0,5W |
| 3880 | 5322111 90113 | 560R 2% 0.25W |
| 3881 | 482211652222 | 390R 5% 0.5W |
| 3882 | 4822 11652222 | 390R 5% 0.5W |
| 3885 | 4822111 90163 | jumper |
| 3887 | 482211680747 | 75R5%0,125W |
| 3889 | 482211652383 | 6R8 5% 0.5W |
| 3891 | 482211652269 | 3k3 5% 0.5W |
| 3892 | 482211652269 | 3k3 5% 0.5W |
| 3893 | 4822 11680747 | 75R 5% 0,125W |
| 3922 | 4822 1 1 1 90157 | 3k3 2% 0.25W |

-TTTk-

| | | |
|---|---|---|
| 50102) | 4822 15220606 | 2,2uH 20% |
| 5020 1) | 4822 15753539 | 0,27uH 5% |
| 5031 1) | 482215220667 | 5,6uH 10% |
| 5031 2,10) | 4822 157 52753 | 8,2uH 10% |
| 5031 9) | 4822 15751999 | 10uH 10% |
| 5034 | 4822 15753609 | 0,36uH 5% |
| 5035 | 4822 15753534 | 0,34uH 5% |
| 5036 1) | 4822 157 53537 | 1,35uH5% |
| 50401) | 482215752279 | 33uH 10% |
| 5052 1) | 4822 157 53535 | 0,36uH 5% |
| 50531) | 4822 15753536 | 0,34uH 5% |
| 5054 9) | 4822 157 52286 | 22uH 10% |
| 50681) | 482215753538 | 0,75uH 5% |
| 5132 10) | 482215753534 | 0,34uH 5% |
| 5134 10) | 4822 15752286 | 22uH 10% |
| 5290 | 482215810551 | 27uH 7,5% |
| 5291 | 482215810551 | 27uH 7,5% |
| 53161,3) | 4822 15753543 | 2,35uH 10% |
| 5321 1,3) | 4822 15760388 | 10uH 2% |
| 53271,3) | 4822 15751999 | 10uH 10% |
| 5328 1,3) | 482215751999 | 10uH 10% |
| 5330 | 482215753916 | 3,3uH 10% |
| 5331 | 4822 15760092 | 3,3uH 10% |
| 5332 | 4822 15760092 | 3,3uH 10% |
| 5333 | 482215760092 | 3,3uH 10% |
| 5334 | 4822 157 60092 | 3,3uH 10% |
| 5335 | 4822 15760092 | 3,3uH 10% |
| 5384 | 4822 157 52258 | 27uH |
| 5452 | 482215220678 | 33uH 10% |
| 5534 | 4822 158 10728 | |
| 5541 | 4822 146 10111 | LINE DRIVER |
| 5542 | 4822 157 60387 | 1uH 10% |
| 5545 | 4822 15753862 | L.O.T. |
| 5549 | 482215753069 | |
| 5554 | 482215621332 | AT4042/51 |
| 5578 | 482215753995 | 100uH 10% |
| 5582 | 532215752539 | 15uH7,5% |
| 5588 | 4822 157 52505 | 33uH 10% |
| 5593 | 4822 15753861 | |
| 5600 | 482215753348 | |
| 5605 | 4822 157 53995 | 100uH 10% |
| 5606 | 4822 157 53995 | 100uH 10% |
| 5619 | 482215621125 | 3,9uH 10% |
| 5621 | 4822 15753903 | 180uH 10% |
| 5625 | 482215753854 | S.O.P.S. |
| 5631 | 4822 158 10551 | 27uH 7,5% |
| 5632 | 482215810551 | 27uH 7,5% |
| 5701 | 482215752843 | 56uH 5% |

-D-

| | | |
|---|---|---|
| 6004 | 482213080881 | LLZ-C33 |
| 6018 1) | 4822 13080888 | BA682 |
| 6027 1) | 4822 130 30621 | 1N4148 |
| 60371) | 4822 13080888 | BA682 |
| 6051 1) | 4822 13080888 | BA682 |
| 6052 1) | 4822 130 80888 | BA682 |
| 60531) | 482213080888 | BA682 |
| 60541) | 4822 130 80888 | BA682 |

**1001 CARR1ER PANEL**

## -D-

| | | |
|---|---|---|
| 6055 1) | 4822 130 80888 | BA682 |
| 6056 1) | 4822 13080888 | BA682 |
| 6058 1) | 4822 13080888 | BA682 |
| 60662,10) | 4822 130 30621 | 1N4148 |
| 6280 | 482213081139 | LLZ-C3V3 |
| 6281 | 4822 13081139 | LLZ-C3V3 |
| 6282 | 4822 13080446 | LL4148 |
| 6283 | 482213080446 | LL4148 |
| 6284 | 4822 13080446 | LL4148 |
| 6285 | 4822 13034195 | BZX79-C13 |
| 6335 | 482213080446 | LL4148 |
| 6367 | 4822 13080446 | LL4148 |
| 6421 | 4822 13080446 | LL4148 |
| 6455 | 482213081138 | LLZ-C2V7 |
| 6456 | 482213080446 | LL4148 |
| 6457 | 482213030621 | 1N4148 |
| 6465 | *4822 130 30621* | 1N4148 |
| 6502 | 482213081141 | BZV55-C43 |
| 6503 | 4822 130 42489 | BYD33G |
| 6518 | 4822 130 80446 | LL4148 |
| 6519 | 4822 13080446 | LL4148 |
| 6546 | 482213041275 | BY228/20 |
| 6547 | 482213032058 | BYW95B |
| 6551 | 4822 130 42488 | BYD33D |
| 6560 | 4822 130 80446 | LL4148 |
| 6561 | 482213034383 | BZX79-C47 |
| 6570 | 482213042606 | BYD33J |
| 6571 | 482213042488 | BYD33D |
| 6575 | 4822 13042489 | BYD33G |
| 6580 | 482213080915 | BYD74C |
| 6585 | 4822 13042488 | BYD33D |
| 6590 | 482213081141 | BZV55-C43 |
| 6591 | 482213080446 | LL4148 |
| 6592 | 482213081144 | LLZ-C30 |
| 6593 | 4822 130 80446 | LL4148 |
| 6594 | 4822 13080446 | LL4148 |
| 6602 | 4822 13031933 | 1N5061 |
| 6603 | 482213031933 | 1N5061 |
| 6604 | 4822 130 31933 | 1N5061 |
| 6605 | 482213031933 | 1N5061 |
| 6611 | 482213080446 | LL4148 |
| 6612 | 482213080446 | LL4148 |
| 6613 | 482213080446 | LL4148 |
| 6614 | 4822 13080446 | LL4148 |
| 6617 | 4822 130 31456 | BZV85-C5V1 |
| 6618 | 482213042488 | BYD33D |
| 6621 | 482213042488 | BYD33D |
| 6622 | 482213080446 | LL4148 |
| 6630 | 4822 13081175 | BYD74G |
| 6637 | 4822 13081147 | LLZ-F6V2 |
| 6638 | 4822 13081145 | LLZ-F2V4 |
| 6640 | 4822 130 80914 | BYD74B |
| 6641 | 4822 130 80914 | BYD74B |
| 6644 | 4822 130 80446 | LL4148 |
| 6645 | 4822 13042488 | BYD33D |
| 6646 | 4822 13080446 | LL4148 |
| 6648 | 482213081146 | LLZ-F24 |
| 6649 | 4822 13080446 | LL4148 |
| 6653 | 4822 130 80446 | LL4148 |
| 6657 | 4822 13081143 | LLZ-C20 |
| 6660 7,9) | 4822 130 80914 | BYD74B |
| 66608,10) | 4822 13042488 | BYD33D |
| 6661 7,9) | 482213080914 | BYD74B |
| 6661 8,10) | 4822 13042488 | BYD33D |
| 6662 | 4822 130 80905 | LLZ-F5V1 |
| 6665 | 4822 13080883 | LLZ-C4V7 |

## -D-

| | | |
|---|---|---|
| 6669 | 482213080446 | LL4148 |
| 6670 | 4822 13020245 | SFOR5D43 |
| 6721 | 4822 13080446 | LL4148 |
| 6722 | 4822 13080446 | LL4148 |
| 6723 | 482213080446 | LL4148 |
| 6726 7) | 4822 13080446 | BAS32L |
| 6727 8) | 4822 13080446 | LL4148 |
| 6728 1) | 482213080446 | LL4148 |
| 6730 | 4822 13080446 | LL4148 |
| 6741 | 4822 13080884 | LLZ-C5V1 |
| 6742 | 4822 209 72895 | TLUV5300 |
| 6743 | 4822 13030621 | 1N4148 |
| 6744 | 4822 13030621 | 1N4148 |
| 6745 | 4822 13030621 | 1N4148 |
| 6815 | 4822 13042488 | BYD33D |
| 6864 | 4822 13080446 | LL4148 |

## -IC- 1

| | | |
|---|---|---|
| 7020 | 482220972812 | TDA2549/C4 |
| 7027 1) | 532213042012 | BC858 |
| 7030 1) | 4822 13061207 | BC848 |
| 7039 | 4822 13044121 | BC338 |
| 7044 | 4822 13061207 | BC848 |
| 71301) | 482220973219 | TDA4445B |
| 71302,8) | 482220981878 | TDA2545A |
| 7270 | 4822 209 73853 | TDA1521/N4 |
| 7281 | 482213061207 | BC848 |
| 7282 | 4822 13061207 | BC848 |
| 7284 | 5322 13042012 | BC858 |
| 7285 | 4822 13042513 | BC858C |
| 7286 | 482213042513 | BC858C |
| 7287 | 4822 13042513 | BC858C |
| 7305 | 4822 209 60834 | TDA8451/N5 |
| 7315 1,3) | 4822 209 73214 | TDA8490/N4 |
| 73161,3) | 532213041982 | BC848B |
| 7350 | 482220961027 | TDA8390/N4 |
| 7351 | 5322 13041982 | BC848B |
| 7360 | 4822 209 60835 | TDA8452/N4 |
| 7363 | 5322 13041982 | BC848B |
| 7364 | 5322 13042012 | BC858 |
| 73651,3) | 5322 13042012 | BC858 |
| 7422 | 5322 13041982 | BC848B |
| 7423 | 532213042012 | BC858 |
| 7425 | 482220971512 | TDA4565/V4 |
| 7455 | 5322 13042012 | BC858 |
| 7470 | 4822 209 72363 | TDA2579A/N8 |
| 7500 | 4822 13041344 | BC337-40 |
| 7502 | 482213060775 | 2SD1266P |
| 7503 | 482213061236 | BD234 |
| 7530 | 482213042705 | BC847 |
| 7533 | 4822 13060111 | 2SA1359 |
| 7540 | 4822 13042159 | BF819 |
| 7545 | 482213061265 | BU508AF |
| 7591 | 5322 13042012 | BC858 |
| 7593 | 5322 130 42012 | BC858 |
| 7594 | 4822 13061207 | BC848 |
| 7612 | 5322 130 42136 | BC848C |
| 7614 | 4822 130 80891 | CNX83A |
| 7615 | 482213042513 | BC858C |
| 7616 | 5322 130 44647 | BC368 |
| 7625 | 4822 130 61407 | BUT18AF |
| 7637 | 5322 13042136 | BC848C |
| 7651 | 4822 13042513 | BC858C |
| 7652 | 5322 13042756 | BC857C |
| 7654 | 4822 13042133 | BC817 |

**1001 CARRIER PANEL**

-IC-

| | | |
|---|---|---|
| 7655 | 4822 130 42615 | BC817-40 |
| 7656 | 4822 130 61233 | BC857 |
| 7661 | 5322 130 44921 | BD943 |
| 7663 | 5322 130 42012 | BC858 |
| 7671 | 4822 130 61207 | BC848 |
| 7720 7,9) | 4822 209 61152 | TMP47C634N-2675 |
| 77208,10) | 4822 209 60941 | TMP47C634N-2416 |
| 7733 | 4822 130 61207 | BC848 |
| 7737 1) | 4822 130 61207 | BC848 |
| 7741 1) | 4822 130 61207 | BC848 |
| 7750 | 4822 130 61207 | BC848 |
| 7754 | 4822 130 61207 | BC848 |
| 7757 | 4822 130 61207 | BC848 |
| 7766 | 4822 130 61207 | BC848 |
| 7770 | 4822 209 73221 | PCD8582P |
| 7857 | 4822 209 73852 | PMBT2369 |
| 7860 | 5322 130 42136 | BC848C |
| 7861 | 5322 130 42012 | BC858 |
| 7870 | 5322 130 41982 | BC848B |

**1004 SURROUND SOUND PANEL**

Mechanical parts

| | | |
|---|---|---|
| 10 | 4822 264 40207 | 3p male |
| | 4822 267 40749 | 3p female |
| 12 | 4822 264 40207 | 3p male |
| | 4822 267 40794 | 3p female |
| 14 | 4822 264 40207 | 3p male |
| | 4822 267 40794 | 3p female |
| 15 | 4822 264 40207 | 3p male |
| | 4822 267 40794 | 3p female |
| 40 | 4822 267 20236 | dual jack 3,5mm |
| 41 | 4822 267 20236 | dual jack 3,5mm |
| 42 | 4822 267 30631 | dual CINCH |

-C-

| | | |
|---|---|---|
| 2256 | 5322 121 42927 | 3,9 NF 5% 100V |
| 2257 | 5322 121 42927 | 3,9 NF 5% 100V |
| 2267 | 5322 121 42927 | 3.9 NF 5% 100V |
| 2268 | 5322 121 42927 | 3,9 NF 5% 100V |
| 2296 | 5322 121 42927 | 3,9 NF 5% 100V |
| 2297 | 5322 121 42927 | 3,9 NF 5% 100V |

-R-

| | | |
|---|---|---|
| 3261 | 482211380224 | 4R7 10% 5W |
| 3266 | 482211652175 | 100R5%0,5W |
| 3267 | 482211652175 | 100R5%0,5W |

Mechanical parts

| | | |
|---|---|---|
| 19 | 4822 265 30378 | 4p male |
| | 4822 267 50824 | 4p female |
| 20 | 4822 290 40295 | 7p male |
| | 4822 265 40252 | 7p female |
| 53 | 4822 255 70247 | picture tube socket |
| 55 | 4822 492 63733 | spring fix. IC |
| 68 | 4822 535 30096 | eyelet1,52XO,18X2,23mm |
| | 482232020126 | focus cable |

-C-

| | | |
|---|---|---|
| 2333 | 482212233104 | 100nF10°/o63V |
| 2358 | 482212141689 | 100nF10%250V |
| 2376 | 4822 124 40433 | 47uF 20% 25V |
| 2377 | 4822 12231772 | 47pF 5% 50V |
| 2381 | 4822 12231972 | 39pF 5% 50V |
| 2385 | 482212231972 | 39pF 5% 50V |
| 2389 | 482212233104 | 100nF 10% 63V |
| 2390 | 4822 122 32444 | 33pF 5% 50V |
| 2397 | 5322 121 50885 | 33nF5%1kV |
| 2398 | 5322 12232347 | 270pF2%100V |
| 2412 | 5322 122 32343 | 47pF 2% 100V |
| 2413 | 482212151286 | 120nF10%63V |
| 2415 | 482212440772 | 6,8uF20%100V |
| 2417 | 4822 12231727 | 470pF 5% 63V |
| 2418 | 482212231727 | 470pF 5% 63V |
| 2419 | 4822 12231727 | 470pF 5% 63V |
| 2446 | 4822 12151394 | 270nP 20% 63V |

-R-

| | | |
|---|---|---|
| 3325 | 5322 11653736 | 330R 1% 0,6W |
| 3371 | 48221 1 190409 | 1M25%0,25W |
| 3372 | 48221 1 190368 | 680k2%0,125W |
| 3373 | 48221 1 190571 | 3k92%0,125W |
| 3374 | 4822111 90162 | 680R 2% 0,125W |
| 3375 | 4822 111 30542 | 180R5%0,33W |
| 3376 | 4822 111 30524 | 39R 5% 0.33W |
| 3377 | 5322111 90092 | 1k 2% 0,125W |
| 3378 | 5322111 90101 | 1k82%0,125W |
| 3379 | 482211680992 | 68k 5% 2W |
| 3380 | 4822 10020149 | 2k2 20%lin |
| 3381 | [illegible] | [illegible] |
| 3382 | 5322111 90101 | 1k82%0,125W |
| 3383 | 482211680992 | 68k 5% 2W |
| 3384 | 482210020149 | 2k2 20%lin |
| 3385 | 5322 111 90092 | 1k 2% 0,125W |
| 3386 | 5322 111 90101 | 1k82%0,125W |
| 3387 | 4822 11680992 | 68k 5% 2W |
| 3389 | 4822111 90575 | 82k 2% 0,125W |
| 3390 | 48221 1 190249 | 10k 2% 0,125W |

-R-

| | | |
|---|---|---|
| 3391 | 4822111 90544 | 6k82%0,125W |
| 3392 | 4822 11681434 | COMP 1k RC1/2 |
| 3393 | 4822 11681434 | COMP 1k RC1/2 |
| 3394 | 4822 11681434 | COMP 1k RC1/2 |
| 3395 | 4822 111 30483 | 1 R 5% 0.33W |
| 3396 | 48221 1 191333 | COMP 2k2 RC1/2 |
| 3397 | 4822 111 91333 | COMP 2k2 RC1/2 |
| 3398 | 482211681434 | COMP 1k RC1/2 |
| 3399 | [illegible] | [illegible] |
| 3400 | 4822 11681434 | COMP 1k RC1/2 |
| 3401 | 48221 1 190163 | Jumper |
| 3402 | 48221 1 190163 | Jumper |
| 3403 | 48221 1 190163 | jumper |
| 3412 | 4822 111 90202 | 68k 2% 0.25W |
| 3413 | 482211652244 | 15k5%0,5W |
| 3414 | 48221 1 190214 | 100k 2% 0,125W |
| 3415 | 482211652238 | 12k5%0,5W |
| 3416 | 4822 11652251 | 18k 5% 0,5W |
| 3423 | 48221 1 190249 | 10k 2% 0,125W |
| 3442 | 48221 1 190197 | 220k 2% 0.25W |
| 3446 | 48221 1 190163 | jumper |
| 3447 | 5322 111 90113 | 560R2%0,125W |
| 3448 | 48221 1 190544 | 6k82%0,125W |
| 3449 | 48221 1 190253 | 12k 2% 0,125W |

-L-

| | | |
|---|---|---|
| 5395 | 482215751312 | 68uH 10% |

| | | |
|---|---|---|
| 6405 | 4822 130 80446 | LL4148 |
| 6406 | 4822 13080446 | LL4148 |
| 6407 | 4822 13080446 | LL4148 |
| 6410 | 4822 13080877 | BAV103 |
| 6411 | 4822 13080877 | BAV103 |
| 6412 | 4822 13080877 | BAV103 |
| 6417 | 4822 13080446 | LL4148 |
| 6418 | 4822 13080446 | LL4148 |
| 6419 | 4822 13080446 | LL4148 |
| 6447 | 4822 13080446 | LL4148 |
| 6448 | 48221 3081015 | LLZ-F10 |

-IC-

| | | |
|---|---|---|
| 7391 | 5322 13041983 | BC858B |
| 7413 | 4822 13060373 | BC856B |
| 7465 | 4822 209 73832 | TEA5101A/P |

**1003 TXT PLOF MODULE**

REMARKS

1) only for NORDIC sets
2) not for NORDIC »ets

Mechanical pans

| | | |
|---|---|---|
| 21 | 4822 265 40469 | 6p female gold plated |
| 22 | 4822 265 40471 | 8p female gold plated |

Vahous part«

| | | |
|---|---|---|
| 1801 | 482224271417 | crystal 13,875 MHz |
| 1802 | 482224271508 | tilter 6,0 MHz |

-C-

| | | |
|---|---|---|
| 2793 | 482212232542 | 47nF 10% 50V |
| 2794 | 482212231769 | 18pF5%50V |
| 2795 | 482212231769 | 18pF5%50V |
| 2796 | 482212231769 | 18pF5%50V |
| 2797 | 482212231769 | 18pF5%50V |
| 2798 1) | 4822 122 33205 | 12pF10%63V |
| 2799 1) | 482212233637 | 220pF10%50V |
| 2800 | 482212441584 | 100uF20%10V |
| 2801 | 4822 122 33478 | 10nF20% |
| 2802 | 482212231972 | 39pF 5% 50V |
| 2803 | 482212231972 | 39pF 5% 50V |
| 2804 | 4822 122 31766 | 120pF5%50V |
| 2805 | 4822 122 31766 | 120pF5%50V |
| 2810 | 482212233496 | 100nF10%63V |
| 2811 | 482212233496 | 100nF10%63V |
| 2812 | 4822 122 33496 | 100nF10%63V |
| 2813 | 4822 122 33478 | 10nF20% |
| 2814 | 482212231773 | 560pF 5% 50V |
| 2815 | 482212233496 | 100nF 10% 63V |
| 2816 | 482212231825 | 27pF 5% 50V |
| 2817 | 4822 122 32504 | 15pF 5% 50V |
| 2818 | 532212231647 | 1nF10%50V |
| 2819 | 482212233501 | 470pF 10% |
| 2820 | 4822 122 31797 | 22nF 10% 63V |
| 2821 | 482212232142 | 270pF 5% 63V |
| 2822 | 4822 12231765 | 100pF5%50V |
| 2823 | 4822 122 33501 | 470pF 10% |
| 2824 | 482212232891 | 6<„1F 20% 50V |
| 2825 | 482212441568 | 100uF20%16V |
| 2826 | 482212232504 | 15pF 5% 50V |
| 2827 | 482212232542 | 47nP10%50V |
| 2828 | 4822 122 32542 | 47nF 10% 50V |
| 2829 | 482212441506 | 47uF 20% 16V |
| 2830 | 4822 122 32542 | 47nF 10% 50V |
| 28321) | 482212441585 | 2,2uF 20% 50V |
| 28332) | 482212441585 | 2,2uF 20% 50V |
| 28341) | 482212441626 | 10uF20% 16V |
| 2836 1) | 482212231766 | 120pF 5% 50V |
| 2845 | 482212441584 | 100nF 20% 10V |
| 2846 | 482212441554 | 220uF 20% 10V |
| 2849 | 482212441586 | 15uF20%16V |

-R-

| | | |
|---|---|---|
| 3795 | 4822111 90571 | 3k9 2% 0,125W |
| 3796 | 4822111 90339 | 120R 2% 0,125W |
| 3797 | 482211652176 | 10R5%0,5W |
| 3798 | 4822 1 1 1 90339 | 120R 2% 0,125W |
| 3800 | 4C22111 90249 | 10k 2% 0,125W |
| 3801 | 5322 1 1 1 90094 | 1 M 5% 0,125W |
| 3802 | 5322111 90091 | 100R 2% 0.25W |
| 3803 | 5322111 90091 | 100R2%0,25W |
| 3804 | 5322111 90091 | 100R2%0,25W |

-R-

| | | |
|---|---|---|
| 3805 | 53221 1 190096 | 1k22%0,125W |
| 3807 | 4822 111 90569 | 2k7 2% 0,125W |
| 0000 | 4822111 90249 | 10k 2% 0,125W |
| 3809 | 5322 111 90111 | 4k7 2% 0.25W |
| 3810 | 5322 111 90267 | 33k 2% 0,125W |
| 3811 | 48221 1 190251 | 22k 2% 0,125W |
| 3812 | 48221 1 190157 | 3k32%0,125W |
| 3813 | 48221 1 190154 | 270R2%0,125W |
| 3814 | 482211652204 | 1k5%0,5W |
| 3815 | 4822 111 90151 | 1k52%0,125W |
| 3816 | 48221 1 190202 | 68k 2% 0,125W |
| 3817 | 5322 111 90096 | 1k22%0,125W |
| 3818 | 5322 111 90096 | 1k22%0,125W |
| 3819 | 5322 111 90096 | 1k22%0,125W |
| 3820 | 5322 111 90096 | 1k22%0,125W |
| 3821 | 5322 1 1 190096 | 1k22%0,125W |
| 3822 | 5322 111 90096 | 1k22%0,125W |
| 3823 | 53221 1 190096 | 1k22%0,125W |
| 3824 | 48221 1 190157 | 3k32%0,125W |
| 3825 | 48221 1 190157 | 3k32%0,125W |
| 3826 | 48221 1 130513 | 15R5%0,33W |
| 3827 | 48221 1 190157 | 3k3 2% 0,125W |
| 3828 | 4822111 90124 | 82R2%0,125W |
| 38291) | 482211652211 | 150R5%0,5W |
| 38301) | 482211652379 | 82R 5% 0,5W |
| 3831 1) | 4822111 90162 | 680R2%0,125W |
| 3832 1) | 5322111 90092 | 1k 2% 0,125W |
| 3833 1) | 5322 111 90092 | 1k 2% 0,125W |
| 38341) | 48221 1 190162 | 680R 2% 0,125W |
| 38351) | 5322 111 90113 | 560R 2% 0,125W |
| 38361) | 4822 111 90543 | 47k 2% 0,125W |
| 3837 1) | 5322 111 90092 | 1k 2% 0,125W |
| 38381) | 4822111 90543 | 47k 2% 0,125W |
| 3839 | 5322111 90096 | 1k22%0,125W |
| 3840 | 5322 111 90096 | 1k22%0,125W |
| 3841 | 5322111 90096 | 1k22%0,125W |
| 3842 | 5322111 90096 | 1k22%0,125W |
| 3843 | 5322111 90096 | 1k22%0,125W |
| 3845 | 48221 1 130531 | 68R 5% 0.33W |
| 3846 | 4822111 30531 | 68R 5% 0.33W |
| 3847 | 4822111 90124 | 82R 2% 0,125W |
| 3848 | 5322111 90242 | 180R2%0,125W |
| 3849 | 5322111 90092 | 1k2%0,125W |
| 3900 | 4822111 90163 | jumper |
| 3901 | 482211190163 | jumper |
| 3904 | 4822 1 1 190163 | jumper |
| 3905 | 4822111 90163 | jumper |
| 3906 | 4822111 90163 | jumper |
| 3908 | 4822 1 1 190163 | jumper |
| 3910 | 4822111 90163 | jumper |
| 3913 | 4822 1 1 1 90163 | jumper |
| 3914 | 4822111 90163 | jumper |
| 3915 | 4822 1 1 1 90163 | jumper |
| 3917 | 48221 1 1 90163 | jumper |
| 3918 | 4822111 90163 | jumper |
| 3919 | 4822111 90163 | jumper |
| 3921 | 4822111 90163 | jumper |
| 3922 | 482211190163 | jumper |

-L-

| | | |
|---|---|---|
| 5800 | 482215620966 | 47uH 10% |
| 5801 | 482215752849 | 22uH 10% |
| 5803 | 4822 15752825 | 60uH |
| 5814 | 482215753608 | 10uH 10% |
| 5816 | 4822 15752224 | 15uH 10% |
| 58341) | 482215753001 | 27uH 10% |
| 5847 | 482215751157 | 3,3uH 10% |

**1003 TXT FLOF MODULE**

-D-

| | | |
|---|---|---|
| 6809 | 4822 13080446 | LL4148 |
| 6810 | 4822 13080446 | LL4148 |
| 6811 | 4822 13080446 | LL4148 |
| 6812 | 4822 13080446 | LL4148 |
| 6813 | 4822 13080906 | LLZ-C7V5 |
| 6814 | 482213080446 | BAS32L |
| 6847 | 482213042489 | BYD33G |
| 6848 | 4822 130 80905 | LLZ-F5V1 |

-IC-

| | | |
|---|---|---|
| 7800 | 4822 209 72355 | MAB8461P/W107 |
| 7801 | 482213061207 | BC848 |
| 7802 | 482213061207 | BC848 |
| 7803 | 532213041982 | BC848B |
| 7810 | 4822 209 73584 | KM6264AL-15 |
| 7811 | 532213041982 | BC848B |
| 7812 | 5322 13060159 | BC846B |
| 7820 | 4822 209 73879 | SAA5243P/E/M2 |
| 7830 | 4822 209 72972 | SAA5231/V6 |
| 7831 1) | 4822 13040962 | BC558A |
| 78321) | 4822 130 40937 | BC548B |
| 7846 | 5322 130 44921 | BD943 |
| 7849 | 5322 13042012 | BC858 |

**1010SVHSMODULE**

sch

| | | |
|---|---|---|
| 27 | 4822 265 40821 | 7p male |
| | 4822 265 40252 | 7p female |
| 31 | 4822 267 40878 | 3p male |
| | 4822 267 40794 | 3p female |

-C-

| | | |
|---|---|---|
| 2900 | 4822 121 42246 | 100nF 10% 100V |
| 2901 | 482212233104 | 100nF10°/o63V |
| 2902 | 482212231774 | 56pF 5% 50V |
| 2903 | 4822 12233104 | 100nF 10% 63V |
| 2904 | 4822 124 40435 | 10uF20%50V |
| 2905 | 482212233104 | 100nF 10% 63V |
| 2906 | 4822 12440435 | 10uF20%50V |
| 2907 | 482212233104 | 100nF 10% 63V |
| 2908 | 482212233104 | 100nP10%63V |
| 2909 | 482212231961 | 68pF 5% 63V |
| 2910 | 482212233104 | 100nF 10% 63V |
| 2911 | 482212441568 | 100uF20%16V |
| 2912 | 482212233104 | 100nF 10% 63V |
| 2930 | 482212440435 | 10uP20%50V |
| 2931 | 4822 124 40435 | 10uF20%50V |
| 2932 | 482212440435 | 10uF20%50V |
| 2933 | 4822 124 40435 | 10uF20%50V |
| 2934 | 4822 12441568 | 100uP 20% 16V |

-R-

| | | |
|---|---|---|
| 3900 | 5322111 90113 | 560R 2% 0.25W |
| 3901 | 5322111 90092 | 1k2%0,25W |
| 3902 | 4822111 90217 | 47R 2% 0.25W |
| 3903 | 532211690091 | |
| 3904 | 532211190092 | 1k2%0,25W |
| 3905 | 532211190242 | 180R2%0,25W |
| 3906 | [illegible] | [illegible] |
| 3907 | 48221 1 190251 | 22k 2% 0.25W |
| 3908 | 5322 111 90111 | 4k7 2% 0.25W |
| 3909 | 48221 1 190217 | 47R 2% 0.25W |
| 3910 | 4822111 90217 | 47R 2% 0.25W |
| 3911 | 482211652175 | 100R5%0,5W |
| 3912 | 532211190092 | 1k2%0,25W |
| 3913 | 4822111 90249 | 10k2%0,25W |
| 3914 | 482211190543 | 47k 2% 0.25W |
| 3915 | 5322 111 90106 | 330R 2% 0,25W |

-R-

| | | |
|---|---|---|
| 3916 | 5322111 90109 | 470R 2% 0.25W |
| 3917 | 4822111 90217 | 47R 2% 0.25W |
| 3918 | 5322 111 90092 | 1k2%0,25W |
| 3919 | 4822 111 30531 | 68R 5% 0.33W |
| 1oon | 5322 111 90101 | [illegible] |
| 3921 | 4822111 90575 | 82k 2% 0.25W |
| 3922 | 5322 111 90267 | 33k 2% 0.25W |
| 3923 | 5322 111 90267 | 33k 2% 0.25W |
| 3924 | 482211652226 | 560R 5% 0,5W |
| 3925 | 482211652226 | 560R 5% 0,5W |
| 3926 | 5322 111 90111 | 4k7 2% 0.25W |
| 3930 | 48221 1 190197 | 220k 2% 0.25W |
| 3931 | 48221 1 190197 | 220k 2% 0.25W |
| 3932 | 4822 1 1 190197 | 220k 2% 0.25W |
| 3933 | 48221 1 190197 | 220k 2% 0.25W |
| 3934 | 4822111 91522 | 2k2 5% 0,1 W |
| 3935 | 4822111 91522 | 2k2 5% 0,1 W |
| 3947 | 4822 111 90163 | jumper |
| 3948 | 4822111 90163 | jumper |
| 3950 | 4822111 90163 | jumper |
| 3951 | 4822111 90163 | jumper |
| 3952 | 4822111 90163 | jumper |
| 3953 | 4822111 90163 | jumper |
| 3954 | 4822111 90163 | jumper |
| 3955 | 4822111 90163 | jumper |

| | | |
|---|---|---|
| 5900 | 4822 15752286 | 22uH 10% |

| | | |
|---|---|---|
| 6901 | 4822 130 80446 | LL4148 |
| 6904 | 482213080446 | LL4148 |

-IC_

| | | |
|---|---|---|
| 7900 | 532213041982 | BC848B |
| 7901 | 5322 13041982 | BC848B |
| 7902 | 532213041982 | BC848B |
| 7903 | 532213041982 | BC848B |
| 7904 | 5322209 10576 | HEF4053BP |
| 7905 | 532220910576 | HEF4053BP |
| 7920 | 5322 13041982 | BC848B |

**1995 STEREO SOUND MODULE**

REMARKS

1) only for STEREO FRANCE sets
2) not for STEREO FRANCE sets

Various parts

| | | |
|---|---|---|
| 1161 | 4822 242 70485 | filter 5,742 MHz |
| 1170 | 482224270714 | filter 5,5 MHz |
| 11711) | 482224271713 | filter 6,0 MHz |

-C-

| | | |
|---|---|---|
| 2060 2) | 4822 12233483 | 33nF 10% |
| 2061 2) | 482212231797 | 22nF10%63V |
| 2062 2) | 4822 124 40435 | 10uF20%50V |
| 2063 2) | 482212231972 | 39pF 5% 50V |
| 2066 2) | 4822 12420725 | 3,3uF 50% 63V |
| 2134 | 482212231971 | 10pF 10% 50V |
| 2160 | 4822 122 32765 | 820pF 10% 63V |
| 2161 | 4822 12232482 | 22pF 5% 63V |
| 2162 | 482212231797 | 22nF10%63V |
| 2163 | 482212231797 | 22nF10%63V |
| 21641) | 482212231797 | 22nF10%63V |
| 2165 | 4822 12233104 | 100nF 10% 63V |
| 21691) | 482212231797 | 22nF10%63V |
| 2170 | 482212233205 | 12pF10%63V |
| 2173 | 482212231797 | 22nF10%63V |
| 2174 | 482212231797 | 22nF 10% 63V |
| 2179 1) | 4822 122 33478 | 10nF20% |
| 2181 1) | 4822 12233475 | 180pF2% |
| 2182 1) | 4822 121 51231 | 820pF 1% 400V |
| 21822) | 4822 121 43066 | 1nF1%400V |
| 2183 | 4822 121 51262 | 910pF1%400V |
| 2185 | 4822 121 41757 | 470nF 10% 63V |
| 2186 | 4822 12233104 | 100nF 10% 63V |
| 2200 | 482212233479 | 820pF 5% |
| 2201 | 482212232891 | 68nF 20% 50V |
| 2202 | 482212232891 | 68nF 20% 50V |
| 2203 | 482212420688 | 33uF50%16V |
| 2204 | 4822 12233104 | 100nF 10% 63V |
| 2205 | 4822 121 42936 | 39nF 1% 63V |
| 2206 | 4822 12420697 | 10uF50%25V |
| 2207 | 532212232817 | 100pF10%50V |
| 2208 | 482212233104 | 100nF 10% 63V |
| 2209 | 482212231797 | 22nF10%63V |
| 2211 | 482212421743 | 150uP 20% 16V |
| 2212 | 4822 121 42936 | 39nF 1% 63V |
| 2213 | 482212231797 | 22nF10%63V |
| 2214 | 482212420697 | 10pF 50% 25V |
| 2215 | 4822 124 20689 | 68uF 50% 16V |
| 2219 | 4822 124 20708 | 10pF 50% 40V |
| 2221 | 4822 124 20688 | 33uF50%16V |
| 2222 | 4822 124 20688 | 33uP50%16V |
| 2229 | 4822 121 51252 | 470nF 5% 63V |
| 2232 | 4822 121 51252 | 470nF 5% 63V |
| 2234 | 4822 121 ** | 56nF10%63V |
| 2235 | 4822 121 ** | 56nF10%63V |
| 2236 | 4822 122 32542 | 47nF 10% 50V |
| 2237 | 482212233484 | 4,7nF 10% |
| 2238 | 4822 121 51252 | 470nF 5% 63V |
| 2239 | 482212420686 | 4,7uF50% 16V |
| 2246 | 4822 121 41856 | 22nF 5% 100V |
| 2247 | 4822 121 41856 | 22nF 5% 100V |
| 2250 | 482212233104 | 100nF 10%63V |
| 2252 | 482212231916 | 5,6nF10%50V |
| 2253 | 4822 122 33483 | 33nF 10% |
| 2254 | 4822 122 33482 | 15nF10% |
| 2255 | 482212233482 | 15nF 10% |

-C-

| | | |
|---|---|---|
| 2258 | 4822 121 41757 | 470nF 10%63V |
| 2259 | 4822 121 41757 | 470nF 10%63V |
| 2260 (2.W) | 4822 122 31916 | 5,6nP10%50V |
| 2261 | 482212440435 | 10uF20%50V |
| 2262 | 4822 12420697 | 10uF50%25V |
| 2263 | 4822 12233483 | 33nF 10% |
| 2264 | 482212421743 | 150uF20%16V |
| 2265 | 4822 12233104 | 100nF 10%63V |
| 2266 | 482212420695 | 470uF50% 16V |
| 2269 | 4822 12440435 | 10uF20%50V |
| 2870 | 4822 12440435 | 10uF20%50V |

-R-

| | | |
|---|---|---|
| 3060 2) | 5322 111 90109 | 470R2%0,125W |
| 3061 1) | 48221 1 190163 | jumper |
| 3062 2) | 48221 1 190248 | 2k22%0,125W |
| 3063 2) | 48221 1 190205 | 820k2%0,125W |
| 3065 2) | 4822 111 90568 | 120k2%0,25W |
| 3066 2) | 48221 1 190169 | 560k2%0,125W |
| 3067 2) | 48221 1 190575 | 82k2%0,125W |
| 30681) | 48221 1 190543 | 47k2%0,125W |
| 3069 1) | 48221 1 190163 | jumper |
| 3069 2) | 4822 1 1 190542 | 27k2%0,125W |
| 3160 | 4822 1 1 190157 | 3k32%0,125W |
| 3161 1) | 4822 1 1 190163 | jumper |
| 3161 2) | 4822 1 1 190203 | 68R2%0,125W |
| 3162 | 4822111 90163 | jumper |
| 3164 | 4822111 90163 | jumper |
| 31651) | 5322 111 90111 | 4k7 2% 0,125W |
| 31661) | 5322 111 90111 | 4k72%0,125W |
| 3167 1) | 5322111 90111 | 4k7 2% 0,125W |
| 31691) | 5322111 90118 | 8k2 2% 0,125W |
| 31702) | 4822111 90163 | jumper |
| 3171 2) | 4822111 90163 | jumper |
| 3172 | 5322111 90092 | 1k 2% 0,125W |
| 3173 1) | 4822111 90163 | jumper |
| 3174 1) | 5322111 90111 | 4k7 2% 0,125W |
| 31751) | 4822111 90196 | 15k 2% 0,125W |
| 31761) | 5322 111 90111 | 4k7 2% 0,125W |
| 31771) | 4822 111 90543 | 47k 2% 0,125W |
| 31781) | 4822 1 1 1 90544 | 6k82%0,125W |
| 31801) | 5322 111 90111 | 4k7 2% 0,125W |
| 3181 1) | 4822 111 90543 | 47k 2% 0,125W |
| 3182 | 4822 1 1 1 90248 | 2k2 2% 0,125W |
| 3183 | 4822111 90248 | 2k22%0,125W |
| 3199 | 5322111 90092 | 1k 2% 0,125W |
| 3200 | 4822111 90124 | 82R 2% 0,125W |
| 3201 | 5322 111 90267 | 33k 2% 0,125W |
| 3202 | 4822 111 90238 | 18k 2% 0,125W |
| 3203 | 4822 111 90573 | 56k 2% 0,125W |
| 3204 | 4822111 90157 | 3k32%0,125W |
| 3205 | 4822111 90244 | 1k32%0,125W |
| 3206 | 4822111 90162 | 680R2%0,125W |
| 3208 | 4822111 90249 | 10k 2% 0,125W |
| 3209 | 4822 1 1 1 90162 | 680R 2% 0,125W |
| 3212 | 4822 10020166 | 10k30%linO,1W |
| 3213 | 4822 111 90244 | 1k32%0,125W |
| 3215 | 4822111 90163 | jumper |
| 3216 | 4822111 90163 | jumper |
| 3217 | 4822111 90163 | jumper |
| 3219 | 5322111 90113 | 560R2%0,125W |
| 3220 | 4822 1 1 1 90573 | 56k 2% 0,125W |
| 3221 | 4822 111 90573 | 56k 2% 0,125W |
| 3222 | 53221 1 190376 | 4R75%0,125W |
| 3225 | 5322111 90106 | 330R 2% 0,125W |
| 3226 | 4822111 90163 | jumper |

| | | |
|---|---|---|
| **-R-** | | |
| 3228 | 53221 1 190106 | 330R2%0,125W |
| 3230 | 48221 1 190163 | Jumper |
| 3231 | 48221 1 190251 | 22k2%0,125W |
| 3232 | 48221 1 190248 | 2k22%0,125W |
| 3233 | 48221 1 190251 | 22k2%0,125W |
| 3234 | 48221 1 190251 | 22k2%0,125W |
| 3235 | 4822111 90205 | 820k2%0,125W |
| 3239 | 48221 1 190202 | 68k2%0,125W |
| 3240 | 5322111 90267 | 33k2%0,125W |
| 3241 | 48221 1 190542 | 27k2%0,125W |
| 3242 | 5322 111 90106 | 330R2%0,125W |
| 3243 | 4822 10011348 | 1k30%lin 0,1W |
| 3244 | 53221 1 190106 | 330R2%0,125W |
| 3245 | 482210011348 | 1k30%lin 0,1W |
| 3246 | 5322 111 90094 | 1M5%0,125W |
| 3871 | 4822 111 90151 | 1k52%0,125W |
| 3875 | 4822 111 90542 | 27k2%0,125W |
| 3876 | 4822 111 90542 | 27k2%0,125W |
| **-L-** | | |
| 5182 | 482215752511 | 0,83uH 7% |
| 5183 | 4822 15752511 | 0,83nH 7% |
| 5200 | 482215752512 | 10,6mH 10% |
| **-D-** | | |
| 6061 2) | 4822 130 80446 | LL4148 |
| 6062 2) | 4822 130 80446 | LL4148 |
| 6063 2) | 482213080446 | LL4148 |
| 6065 2) | 482213080446 | LL4148 |
| 61651) | 482213080888 | BA682 |
| 61661) | 482213080888 | BA682 |
| 6179 1) | 4822 13080888 | BA682 |
| 6180 | 4822 130 80446 | LL4148 |
| 6181 2) | 482213081027 | BZV55-C11 |
| **-IC-** | | |
| 7060 2) | 482213042513 | BC858C |
| 7170 | 4822 209 73756 | U2829B |
| 71761) | 482213061207 | BC848 |
| 7200 | 532213041983 | BC858B |
| 7208 | 4822 130 61207 | BC848 |
| 7220 | 4822 209 •• | TDA8405/V4 |
| 7260 | 4822 209 *• | TDA8425/V4 |
| 7261 | 5322 13042136 | BC848C |
| 7262 | 532213042136 | BC848C |

**1995 NICAM SOUND MODULE**

REMAR KS

1) only (or PAL-I seto
2) not (or PAL-I sets

Various parts

| | | |
|---|---|---|
| 1031 | 4822 253 10064 | fuse T0.4A |
| 10702) | 4822 242 70714 | filter 5,5 MHz |
| 1071 1) | 482224271713 | filter 6,0 MHz |
| 10802) | 4822 242 70485 | filter 5,742 MHz |
| 1100 | 5322 242 72349 | crystal 10,000 Mnz |
| 1205 1) | 4822 242 72303 | filter TH316BQM-2110 |
| 12052) | 4822 242 72301 | filter TH316BOM-2080 |
| 12201) | 4822 242 72347 | crystal 6,552 MHz |
| 1220 2) | 4822 242 72302 | crystal 5,850 MHz |
| 1275 | 4822 242 72304 | crystal 5,824 MHz |
| **-C-** | | |
| 2000 | 4822 12440248 | 10uF20%63V |
| 2020 | 482212440198 | 470uF20% 16V |
| 2021 | 4822 121 51252 | 470nF 5% 100V |
| 2030 | 4822 12233496 | 100nP10%63V |
| 2031 | 4822 124 40849 | 330MF20%16V |
| 2032 | 4822 12441584 | 100uF20% 10V |
| 2033 | 4822 12233496 | 100nF 10% 63V |
| 2035 | 482212441762 | 33uF20%16V |
| 2040 | 482212233496 | 100nF 10% 63V |
| 2050 | 4822 12233483 | 33nF10%63V |
| 2060 | 532212231647 | 1nF10%63V |
| 2065 | 4822 122 32507 | 6,8pF 5% 50V |
| 2066 | 5322 12231647 | 1nF 10% 63V |
| 2067 | 4822 12233496 | 100nF 10% 63V |
| 2070 | 4822 122 33496 | 100nF 10% 63V |
| 2071 | 482212233205 | 12pP10%63V |
| 2072 | 482212231797 | 22nF10%63V |
| 2073 | 4822 122 31797 | 22nF10%63V |
| 2075 1) | 482212151231 | 820pF1%400V |
| 2075 2) | 4822 121 43066 | 1nF 1%400V |
| 2080 2) | 4822 122 32482 | 22pF 5% 63V |
| 2082 2) | 4822 12231797 | 22nF10%63V |
| 20832) | 482212231797 | 22nF10%63V |
| 20652) | 4822 121 51262 | 910pF 1% 400V |
| 2100 | 4822 122 33496 | 100nF 10% 63V |
| 2101 | 482212233496 | 100nF 10% 63V |
| 2105 | 4822 121 51252 | 470nP5%100V |
| 21072) | 482212231766 | 120pF5%50V |
| 21082) | 4822 121 43047 | 1UF10%63V |
| 21092) | 4822 121 43047 | 1UF10%63V |
| 21102) | 482212231961 | 68pF10%50V |
| 21162) | 482212440248 | 10uF20%63V |
| 2120 | 4822 121 42408 | 220nF 20% 63V |
| 2125 | 482212231916 | 5,6nF 10% 63V |
| 2140 | 482212441641 | 33pF20%16V |
| 2141 | 4822 12441641 | 33pF 20% 16V |
| 2150 | 4822 122 33496 | 100nF 10% 63V |
| 2160 | 4822 121 51252 | 470nP5%100V |
| 2162 | 4822 121 51252 | 470nP 5% 100V |
| 2165 | 482212441569 | 150uP20%16V |
| 2170 | 4822 122 33483 | 33nF 10% 63V |
| 2171 | 4822 122 33483 | 33nF 10% 63V |
| 2172 | 482212231916 | 5,6nF10%63V |
| 2173 | 482212231916 | 5,6nF10%63V |
| 2175 | 4822 12233482 | 15nF10%63V |
| 2176 | 4822 121 51252 | 470nF 5% 100V |
| 2177 | 4822 122 33482 | 15nF10%63V |
| 2176 | 4822 121 51252 | 470nP5% 100V |
| 2180 | 482212441626 | 10uF20%16V |

1995 NICAM SOUND MODULE

-C-

| | | |
|---|---|---|
| 2181 | 4822 12440248 | 10uF20%63V |
| 2190 | 4822 12441626 | 10uF20% 16V |
| 2200 | 4822 12441641 | 33uF20% 16V |
| 2201 | 4822 12233478 | 10nF 10% 63V |
| 2202 | 4822 12441641 | 33uF 10% 63V |
| 2203 | 4822 12233478 | 10nF 10% 63V |
| 2206 | 4822 12233478 | 10nF 10% 63V |
| 2210 | 4822 12441644 | 0,47uF 20% 50V |
| 2211 | 4822 12441644 | 0,47uF 20% 50V |
| 2216 | 4822 12233205 | 12pF 10% 63V |
| 2217 | 4822 12231774 | 56pF 5% 50V |
| 2218 | 482212231769 | 18pF5%50V |
| 2220 | 4822 12550045 | 20pF trimmer |
| 2230 | 4822 12441644 | 0,47uF20% 50V |
| 2231 | 4822 12233478 | 10nF 10% 63V |
| 2240 | 482212233478 | 10nF 10% 63V |
| 2241 | 4822 12233478 | 10nF 10% 63V |
| 2242 | 4822 12233496 | 100nF 10% 63V |
| 2243 | 482212233496 | 100nF 10% 63V |
| 2250 | 4822 12233637 | 220pF10%50V |
| 2251 | 482212233637 | 220pF10%50V |
| 2260 | 4822 12233496 | 100nF 10% 63V |
| 2261 | 482212233496 | 100nF 10% 63V |
| 2263 | 4822 12233478 | 10nF 10% 63V |
| 2270 | 4822 12441644 | 0,47uF 20% 50V |
| 2271 | 482212233478 | 10nF 10% 63V |
| 2275 | 482212231774 | 56pF 5% 50V |
| 2276 | 482212232444 | 33pF 5% 50V |
| 2277 | 482212231769 | 18pF5%50V |
| 2280 | 4822 12232504 | 15pF5%50V |
| 2290 | 4822 12232504 | 15pF5%50V |
| 2291 | 4822 122 32504 | 15pF5%50V |
| 2300 | 4822 122 33496 | 100nF 10% 63V |
| 2310 | 4822 12233496 | 100nF 10% 63V |
| 2312 | 482212231772 | 47pF 5% 50V |
| 2315 | 482212550045 | 20pF trimmer |
| 2317 | 4822 12233478 | 10nF 10% 63V |
| 2318 | 482212231972 | 39pF 5% 50V |
| 2325 | 482212231961 | 68pF 5% 63V |
| 2330 | 482212441506 | 47uF20% 16V |
| 2331 | 482212231797 | 22nF10%63V |
| 2340 | 482212233496 | 100nP10%63V |
| 2341 | 482212441506 | 47uF20% 16V |
| 2345 | 482212231797 | 22nF 10% 63V |
| 2350 | 482212441506 | 47pF 20% 16V |
| 2352 | 482212231797 | 22nF 10% 63V |
| 2353 | 482212231797 | 22nP10%63V |
| 2356 1) | 482212231797 | 22nF10%63V |
| 2356 2) | 4822 12233608 | 39nF10%63V |
| 2357 1) | 4822 122 31797 | 22nF10%63V |
| 2357 2) | 4822 12233608 | 39nF10%63V |
| 2358 1) | 4822 12232856 | 8,2nF10%63V |
| 2358 2) | 482212231759 | 18nF 10% 63V |
| 2359 1) | 4822 122 32856 | 8,2nF10%63V |
| 2359 2) | 482212231759 | 18nF 10% 63V |
| 2368 1) | 5322 12231647 | 1nF10%63V |
| 2369 1) | 5322 12231647 | 1nP10%63V |
| 2370 | 4822 12232999 | 2,2nF 5% 63V |
| 2371 | 4822 12232999 | 2,2nF 5% 63V |
| 2372 | 4822 126 10171 | 2,7nF 5% 63V |
| 2373 | 4822 126 10171 | 2,7nF 5% 63V |
| 2374 | 4822 12231773 | 560pF 5% 50V |
| 2375 | 4822 12231773 | 560pF 5% 50V |
| 2380 | 4822 121 51252 | 470nF5%100V |
| 2381 | 4822 121 51252 | 470nF5%100V |

— R —

| | | |
|---|---|---|
| 3000 | 4822 111 90151 | 1k52%0,125W |
| 3001 | 4822 111 90542 | 27k2%0,125W |
| 3C02 | 4822 111 90542 | 27k2%0,125W |
| 3010 | 4822 11652219 | 330R 5% 0,5W |
| 3011 | 4822 11652219 | 330R 5% 0,5W |
| 3029 | 4822 1 1 90163 | jumper |
| 3030 | 5322 1 1 90109 | 470R 2%0,125W |
| 3035 | 5322 1 1 90106 | 330R 2% 0.125W |
| 3036 | 4822 1 1 90163 | jumper |
| 3037 | 4822 1 1 90163 | jumper |
| 3040 | 4822 11652219 | 330R 5% 0,5W |
| 3042 | 4822 1 1 90163 | Jumper |
| 3043 | 4822 1 1 90163 | Jumper |
| 3044 | 4822 1 1 90163 | jumper |
| 3045 | 4822 1 1 90163 | jumper |
| 3050 | 4822 1 1 30504 | 6R8 5% 0.33W |
| 3060 | 4822 111 90249 | 10k2%0,125W |
| 3061 | 4822 11652279 | 4k3 5% 0,5W |
| 3062 | 4822 1 1 90154 | 270R2%0,125W |
| 3063 | 4822 11652217 | 270R 5% 0,5W |
| 3064 | 5322 111 90109 | 470R2%0,125W |
| 3067 | 4822 111 90163 | Jumper |
| 3071 | 5322 111 90092 | 1k2%0,125W |
| 3075 1) | 4822 1 1 90544 | 6k8 2% 0.25W |
| 3075 2) | 4822 111 90151 | 1k52%0,125W |
| 3080 2) | 5322 111 90092 | 1k2%0,125W |
| 3085 2) | 4822 111 90151 | 1k52%0,125W |
| 3100 | 4822 1 1 1 30483 | 1R5%0,33W |
| 3101 | 4822 1 1 90163 | jumper |
| 3103 | 4822 1 1 90163 | jumper |
| 3104 | 4822 11681816 | jumper |
| 3105 2) | 4822 10020166 | 10k30%lin0,1W |
| 3106 1) | 5322 111 90111 | 4k72%0,125W |
| 3107 1) | 5322 111 90268 | 5k1 2%0,125W |
| 3108 2) | 4822 1 1 90572 | 5k62%0,125W |
| 3109 2) | 4822 111 90163 | jumper |
| 3110 2) | 4822 1 1 1 90249 | 10k2%0,125W |
| 3111 2) | 4822 1 1 1 90253 | 12k2%0,125W |
| 3112 2) | 5322 1 1 90106 | 330R 2% 0,125W |
| 3113 2) | 4822 111 90171 | 820R2%0,125W |
| 3114 2) | 4822 1 1 1 90302 | 270k 2% 0,125W |
| 3115 2) | 4822 1 1 1 90163 | jumper |
| 3116 2) | 4822 1 1 1 90572 | 5k62%0,125W |
| 3117 2) | 4822 1 1 1 90572 | 5k62%0,125W |
| 3118 2) | 4822 1 1 1 90214 | 100k 2% 0,125W |
| 3125 | 4822 1 1 1 90202 | 68k 2% 0,125W |
| 3140 | 4822 1 1 1 90573 | 56k 2% 0,125W |
| 3141 | 4822 1 1 1 90573 | 56k 2% 0,125W |
| 3152 | 4822 11652219 | 330R 5% 0.5W |
| 3153 | 4822 11652219 | 330R 5% 0.5W |
| 3154 | 4822 111 90163 | jumper |
| 3165 | 5322 111 90376 | 4R75%0,125W |
| 3180 | 4822 11652228 | 680R 5% 0,5W |
| 3182 | 4822 1 1 90162 | 680R2%0,125W |
| 3190 | 4822 1 1 90248 | 2k2 2% 0,125W |
| 3191 | 4822 1 1 1 90251 | 22k 2% 0,125W |
| 3192 | 4822 1 1 1 90251 | 22k 2% 0,125W |
| 3200 | 4822 1 1 1 30494 | 2R7 5% 0.33W |
| 3202 | 4822 1 1 1 30508 | 10R5%0,33W |
| 3205 | 4822 11652224 | 470R 5% 0,5W |
| 3206 | 5322 111 90109 | 470R 2% 0,125W |
| 3210 | 5322 111 90099 | 150k 2% 0,125W |
| 3211 | 4822 1 1 1 90197 | 220k 2% 0,125W |
| 3216 | 4822 1 1 1 90245 | 51 OR 2% 0,125W |
| 3218 | 5322 1 1 1 90092 | 1k 2% 0,125W |
| 3230 | 5322 1 1 1 90108 | 39k 2% 0,125W |
| 3270 | 5322 1 1 1 90108 | 39k 2% 0,125W |

## -R-

| | | |
|---|---|---|
| 3275 | 5322111 90109 | 470R2%0,125W |
| 3276 | 53221 1 190092 | 1k2%0,125W |
| 3280 | 53221 1 190106 | 330R2%0,125W |
| 3299 2) | 48221 1 190163 | jumper |
| 3300 | 4822 111 30497 | 3R9 5% 0.33W |
| 3301 | 48221 1 190163 | Jumper |
| 6606 | 48221 1 190163 | Jumper |
| 3310 | 53221 1 190092 | 1k2%0,125W |
| 3312 | 48221 1 190249 | 10k2%0,125W |
| 3321 | 48221 1 190163 | jumper |
| 3322 | 48221 1 190163 | jumper |
| 3324 | 48221 1 190163 | Jumper |
| 3325 | 48221 1 190163 | jumper |
| 3330 | 4822 111 30494 | 2R7 5% 0.33W |
| [illegible] | 48221 1 190214 | [illegible] |
| 3332 | 48221 1 190214 | 100k2%0,125W |
| 3333 | 48221 1 190543 | 47k2%0,125W |
| 3334 | 48221 1 190163 | jumper |
| 3335 | 48221 1 190571 | 3k92%0,125W |
| 3340 | 48221 1 130494 | 2R75%0,125W |
| 3345 | 5322 111 90118 | 8k2 2% 0,25W |
| 3350 | 4822 111 30508 | 10R5%0,33W |
| 3352 | 48221 1 190163 | jumper |
| 3356 1) | 4822111 90248 | 2k2 2% 0.25W |
| 3356 2) | 5322 111 90092 | 1k2%0,125W |
| 3357 1) | 4822 111 90248 | 2k2 2% 0.25W |
| 3357 2) | 5322 111 90092 | 1k2%0,125W |
| 3358 1) | 48221 1 190249 | 10k2%0,25W |
| 3358 2) | 48221 1 190572 | 5k62%0,125W |
| 3359 1) | 48221 1 190249 | 10k2%0,25W |
| 3359 2) | 48221 1 190572 | 5k62%0,125W |
| 3363 | 4822111 90163 | Jumper |
| 3366 | 5322 111 90111 | 4k7 2% 0,125W |
| 3367 | 5322 111 90111 | 4k7 2% 0,125W |
| 3370 | 5322 111 90111 | 4k7 2% 0,125W |
| 3371 | 5322111 90111 | 4k7 2% 0,125W |

## -L-

| | | |
|---|---|---|
| 5075 | 482215752511 | 0,83uH trimmer |
| 5085 2) | 4822 15752511 | 0,83uH trimmer |
| 5250 | 4822 15751238 | 0,82uH |
| 5251 | 4822 157 51238 | 0,82uH |
| 5317 | 4822 15753575 | 3,3uH |
| 5325 | 4822 15220677 | 3,3uH |

## -D-

| | | |
|---|---|---|
| 6030 | 4822 13080954 | BZV55C5V6 |
| 6031 | 4822 130 80446 | LL4148 |
| 6035 | 4822 13081027 | LLZ-C11 |
| 6114 | 4822 13080954 | B2V55-C5V6 |
| 6190 | 482213030621 | 1N4148 |
| 6312 | 5322 13034953 | BB405B |

## -IC-

| | | |
|---|---|---|
| 7030 | 532213041983 | BC858B |
| 7031 | 532213044921 | BD943 |
| 7035 | 482213061207 | BC848 |
| 7040 | 5322209 10883 | PCF8574P |
| 7060 | 5322 13042136 | BC848C |
| 7065 | 4822 13060514 | BC859B |
| 7070 | 4822 209 73756 | U2829B |
| 7100 | 482220961026 | TDA8415/V1 |
| 71102) | 482213061207 | BC848 |
| 71122) | 5322 13042012 | BC858 |
| 71142) | 482213061207 | BC848 |
| 7150 | 4822 209 " | TDA8425/V4 |
| 7191 | 532213042136 | BC848C |
| 7192 | 532213042136 | BC848C |
| 7200 | 4822 209 73558 | TA8662N |
| 7300 | 4822 13061304 | CF70123 |
| 7330 | 4822 209 73561 | SAA7220P/C |
| 7333 | 4822 13061207 | BC848 |
| 7340 | 4822 209 73236 | TDA1543/N1 |
| 7350 | 482220983163 | LM833N |
| 7351 | 482220983163 | LM833N |

REMARKS

| | |
|---|---|
| 1) | only for NORDIC sets |
| 2) | not for NORDIC sets |
| 3) | only for TOP version |

Mechanical parts

| | | |
|---|---|---|
| 6 | 4822 265 40469 | 6p female gold plated |
| 7 | 4822 265 40471 | 8p female gold plated |

Various parts

| | | |
|---|---|---|
| 1801 | 4822 242 73552 | crystal 13,875 MHz |
| 1802 | 4822 242 71508 | filter 6,0 MHz |

-C-

| | | |
|---|---|---|
| 2792 1) | 4822 122 33496 | 100nF 10% 63V |
| 2793 | 4822 122 32542 | 47nF 10% 50V |
| 2794 | 4822 122 31769 | 18pF 5% 50V |
| 2795 | 4822 122 31769 | 18pF 5% 50V |
| 2796 | 4822 122 31769 | 18pF 5% 50V |
| 2797 | 4822 122 31769 | 18pF 5% 50V |
| 2798 1) | 4822 122 33205 | 12pF 10% 63V |
| 2799 1) | 4822 122 33637 | 220pF 10% 50V |
| 2800 | 4822 124 40178 | 100uF 20% 10V |
| 2801 | 4822 122 32442 | 10nF 20% 50V |
| 2802 | 4822 122 31972 | 39pF 5% 50V |
| 2803 | 4822 122 31972 | 39pF 5% 50V |
| 2804 | 4822 122 31766 | 120pF 5% 50V |
| 2805 | 4822 122 31766 | 120pF 5% 50V |
| 2810 | 4822 122 33496 | 100nF 10% 63V |
| 2811 | 4822 122 33496 | 100nF 10% 63V |
| 2812 | 4822 122 33496 | 100nF 10% 63V |
| 2813 | 4822 122 32442 | 10nF 20% 50V |
| 2814 | 4822 122 31773 | 560pF 5% 50V |
| 2815 | 4822 122 33496 | 100nF 10% 63V |
| 2816 | 4822 122 31825 | 27pF 5% 50V |
| 2817 | 4822 122 32504 | 15pF 5% 50V |
| 2818 | 5322 122 31647 | 1nF 10% 50V |
| 2819 | 4822 122 31727 | 470pF 5% 63V |
| 2820 | 4822 122 31797 | 22nF 10% 63V |
| 2821 | 4822 122 32142 | 270pF 5% 63V |
| 2822 | 4822 122 31765 | 10OpF 5% 50V |
| 2823 | 4822 122 31727 | 470pF 5% 63V |
| 2824 | 4822 122 32891 | 68nF 20% 50V |
| 2825 | 4822 124 41525 | 100uF 20% 25V |
| 2826 | 4822 122 32504 | 15pF 5% 5PV |
| 2827 | 4822 122 32542 | 47nF 10% 50V |
| 2828 | 4822 122 32542 | 47nF 10% 50V |
| 2829 | 4822 124 41506 | 47uF 20% 16V |
| 2830 | 4822 122 32542 | 47nF 10% 50V |
| 2832 1) | 4822 124 41576 | 2.2uF 20% 50V |
| 2833 2) | 4822 124 41576 | 2.2uF 20% 50V |
| 2834 1) | 4822 124 41584 | 100uF 20% 10V |
| 2836 1) | 4822 122 31766 | 120pF 5% 50V |
| 2845 | 4822 124 40178 | 100uF 20% 10V |
| 2846 | 4822 124 41554 | 220uF 20% 10V |
| 2849 | 4822 124 21212 | 15uF 20% 40V |

-R-

| | | |
|---|---|---|
| 3795 | 4822 11 190571 | 3k9 2% 0.125W |
| 3796 | 4822 111 90339 | 1200 2% 0,125W |
| 3797 | 4822 116 52176 | 10Q 5% 0,5W |
| 3798 | 4822 111 90339 | 120Q 2% 0.25W |
| 3800 | 4822 11 190249 | 10k 2% 0.25W |
| 3801 | 4822 051 10105 | 1M 5% 0,25W |
| 3802 | 5322 111 90091 | 1000 2% 0.25W |
| 3803 | 5322 11 190091 | 100Q 2% 0.25W |
| 3804 | [illegible] | 1000 2% 0.25W |
| 3805 | 5322 111 90096 | 1k2 2% 0.25W |
| 3807 | 4822 111 90569 | 2k7 2% 0.25W |
| 3808 | 4822 111 90249 | 10k 2% 0.25W |
| 3809 | 5322 111 90111 | 4k7 2% 0.25W |
| 3810 | 5322 111 90267 | 33k 2% 0.25W |
| 3811 | 4822 11 190251 | 22k 2% 0.25W |
| 3812 | 4822 11 190157 | 3k3 2% 0.25W |
| 3813 | 4822 11 190154 | 270Q 2% 0.25W |
| 3814 | 4822 116 52204 | 1k 5% 0.5W |
| 3815 | 4822 051 10152 | 1k5 2% 0.25W |
| 3816 | 4822 111 90202 | 68k 2% 0.25W |
| 3817 | 5322 111 90096 | 1k2 2% 0.25W |
| 3818 | 5322 11 190096 | 1k2 2% 0.25W |
| 3819 | 5322 111 90096 | 1k2 2% 0.25W |
| 3820 | 5322 111 90096 | 1k2 2% 0.25W |
| 3821 | 5322 11 190096 | 1k2 2% 0,25W |
| 3822 | 5322 11 190096 | 1k2 2% 0.25W |
| 3823 | 5322 111 90096 | 1k2 2% 0,25W |
| 3824 | 4822 111 90157 | 3k3 2% 0.25W |
| 3825 | 4822 11 190157 | 3k3 2% 0.25W |
| 3826 | 4822 11 130513 | 15Q 5% 0,33W |
| 3827 | 4822 11 190157 | 3k3 2% 0.25W |
| 3828 | 4822 051 10122 | 1k2 2% 0.25W |
| 3829 1) | 4822 116 52211 | 1500 5% 0.5W |
| 3830 1) | 4822 116 52379 | 82Q 5% 0.5W |
| 3831 1) | 4822 111 90162 | 680R 2% 0.25W |
| 3832 1) | 4822 051 10102 | 1k 2% 0.25W |
| 3833 1) | 4822 051 10102 | 1k 2% 0.25W |
| 3834 1) | 4822 11 190162 | 680Q 2% 0.25W |
| 3835 1) | 5322 111 90113 | 5600 2% 0.25W |
| 3836 1) | 4822 111 90543 | 47k 2% 0.25W |
| 3837 1) | 4822 051 10102 | 1k 2% 0.25W |
| 3838 1) | 4822 11 190542 | 27k 2% 0.25W |
| 3839 | 5322 111 90096 | 1k2 2% 0.25W |
| 3840 | 5322 111 90096 | 1k2 2% 0.25W |
| 3841 | 5322 111 90096 | 1k2 2% 0.25W |
| 3842 | 5322 111 90096 | 1k2 2% 0.25W |
| 3843 | 5322 111 90096 | 1k2 2% 0.25W |
| 3845 | 4822 11 130531 | 5QQ 5% 0.33W |
| 3846 | 4822 111 30531 | 68Q 5% 0.33W |
| 3847 | 4822 11 190124 | 82Q 2% 0.25W |
| 3848 | 5322 111 90242 | 1800 2% 0.25W |
| 3849 | 4822 051 10102 | 1k 2% 0.25W |
| 3900 | 4822 051 10008 | jumper |
| 3901 | 4822 051 10008 | jumper |
| 3904 | 4822 051 10008 | jumper |
| 3905 | 4822 051 10008 | jumper |
| 3906 | 4822 051 10008 | jumper |
| 3908 | 4822 051 10008 | jumper |
| 3910 | 4822 051 10008 | jumper |
| 3913 | 4822 051 10008 | jumper |
| 3914 | 4822 051 10008 | jumper |
| 3915 | 4822 051 10008 | jumper |
| 3917 | 4822 051 10008 | jumper |
| 3918 | 4822 051 10008 | jumper |
| 3919 | 4822 051 10008 | jumper |
| 3921 | 4822 051 10008 | jumper |
| 3922 | 4822 051 10008 | jumper |

-L-

| | | |
|---|---|---|
| 5800 | 4822 156 20966 | 47uH 10% |
| 5801 | 4822 157 52849 | 22uH 10% |

REMARK,

1) only for blackline sets
2) not for blackline sets

Mechanical parts

| | | |
|---|---|---|
| 19 | 4822 265 30378 | 4p male |
| | 4822 267 50824 | 4p female |
| 20 | 4822 290 40295 | 7p male |
| | 4822 265 40252 | 7p female |
| 532) | 4822 255 70247 | picture tube socket |
| 53 1) | 4822 255 70257 | picture tube socket |
| 55 | 4822 492 63733 | springfix1C |
| 68 | 4822 535 30096 | eyelet 1,52x0.18x2.23mm |
| | 48223202 0126 | focus cable |

-C-

| | | |
|---|---|---|
| 2333 | 4822 12233104 | 100nF 10°o 63V |
| 2358 | 4822 121 41689 | 100nF 10% 250V |
| 2376 | 4822 124 40433 | 47uF 20% 25V |
| 2377 2) | 4822 12231772 | 47pF 5% 50V |
| 23771) | 4822 122 31839 | 82pF 10% 50V |
| 2381 2) | 4822 122 31972 | 39pF 5% 50V |
| 2381 1) | 482212231961 | 68pF 5% 63V |
| 2385 2) | 4822 122 31972 | 39pP 5% 50V |
| 23851) | 482212231961 | 68pF 5% 63V |
| 2389 | 4822 12233104 | 100nF 10% 63V |
| 2390 | 4822 122 32444 | 33pF 5% 50V |
| 2397 | 5322 121 50885 | 33nF 5% 1kV |
| 2398 | 5322 122 32347 | 270pF 2% 100V |
| 2412 2) | 532212232343 | 47pF 2% 100V |
| 2412 1) | 482212232405 | 33pF 2% 100V |
| 2413 | 4822 121 51286 | 120nF 10% 63V |
| 2415 | 482212440772 | 6,8uF20% 100V |
| 2417 | 482212231727 | 470pF 5% 63V |
| 2418 | 4822 12231727 | 470pF 5% 63V |
| 2419 | 4822 122 31727 | 470pF 5% 63V |
| 2446 2) | 4822 121 51115 | 270nF 10% 63V |

-R-

| | | |
|---|---|---|
| 3325 | 4822 050 23301 | 330Q 1%0,6W |
| 3371 | 482205110125 | 1 M2 5% 0.25W |
| 3372 | 4822 111 90368 | 680k 2% 0.25W |
| 3373 | 4822 051 10392 | 3k9 2% 0.25W |
| 3374 2) | 482205110681 | 680Q 2% 0.25W |
| 33741) | 482205110271 | 270ft 2% 0.25W |
| 3375 | 4822052 10181 | 1800 5% 0.33W |
| 3376 | 4822052 10399 | 39Q 5% 0.33W |
| 3377 2) | 482205110102 | 1k 2%0,25W |
| 33771) | 482205110681 | 680Q 2% 0.25W |
| 3378 | 482205110182 | 1k82%0,25W |
| 3379 | 482205311683 | 68k 5% 2W |
| 3380 2) | 4822 10020149 | 2k2 20% lin |
| 3381 2) | 482205110122 | 1k22%0,25W |
| 3381 1) | 482205110821 | 820ft 2% 0.25W |
| 3382 | 4822051 10182 | 1 k8 2% 0.25W |
| 3383 | 482205311683 | 68k 5% 2W |
| 3384 | 4822 10020149 | 2k2 20% lin |
| 3385 2) | 482205110102 | 1k 2% 0.25W |
| 33851) | 482205110681 | 680S2 2% 0,25W |
| 3386 | 482205110182 | 1k82%0,25W |
| 3387 | 482205311683 | 68k 5% 2W |
| 3389 | 4822 051 10823 | 82k 2% 0,25W |
| 3390 | 4822051 10103 | 10k 2% 0,25W |
| 3391 | 4822051 10682 | 6k8 2% 0.25W |

-R-

| | | |
|---|---|---|
| 3392 | 4822 1 1 6 81434 | COMP 1 k R C 1/2 |
| 3393 | 4822 1 1 6 81434 | COMP 1 k R C 1/2 |
| 6oy | 4822 1 1 6 81434 | COMP 1 k R C 1/2 |
| 3395 | 4822 111 30483 | 1 R 5% 0.33W |
| 3396 | 48221 1 191333 | COMP 2k2 RC1/2 |
| 3397 | 4822 111 91333 | COMP 2k2 RC1/2 |
| 3398 | 4822 1 1 681434 | COMP 1 k R C 1/2 |
| 3399 | 4822 1 1 681434 | COMP 1 k R C 1/2 |
| 3400 | 4822 1 1 681434 | COMP 1 k R C 1/2 |
| 3401 | 4822 051 10008 | jumper |
| 3402 | 4822 051 10008 | jumper |
| 3403 | 4822 051 10008 | jumper |
| 3412 2) | 4822051 10683 | 68k 2% 0,25W |
| 3412 1) | 4822 051 10104 | 100k 2% 0.25W |
| 34132 | 4822 1 1 652244 | 15k 5% 0,5W |
| 3413 1) | 482211652261 | 24k 5% 0.5W |
| 3414 | 482205110104 | 100k 2% 0.25W |
| 3415 | 4822 1 1 652244 | 15k 55 0,5W |
| 34162) | 4822 11652251 | 18k 5% 0.5W |
| 3416 1) | 4822 1 1 652261 | 24k 5% 0.5W |
| 3423 | 482205110103 | 10k 2% 0.25W |
| 3442 2) | 4822 051 10224 | 220k 2% 0.25W |
| 3442 1) | 4822051 10104 | 100k 2% 0.25W |
| 3446 | 4822 051 10008 | jumper |
| 3447 2) | 4822 051 10561 | 560R 2% 0.25W |
| 3448 2) | 4822051 10682 | 6k8 2% 0.25W |
| 3449 2) | 482205110123 | 12k 2% 0.25W |

-L-

| | | |
|---|---|---|
| 5395 2) | 4822 15751312 | 68uH 10% |
| 53951) | 4822 15620915 | 33uH 10% |

-D-

| | | |
|---|---|---|
| 6405 | 4822 130 80446 | LL4148 |
| 6406 | 4822 13080446 | LL4148 |
| 6407 | 4822 13080446 | LL4148 |
| 6410 | 402213080877 | BAV103 |
| 6411 | 4822 130 80877 | BAV103 |
| 6412 | 4822 13080877 | BAV103 |
| 6417 | 4822 13080446 | LL4148 |
| 6418 | 4822 13080446 | LL4148 |
| 6419 | 4822 13080446 | LL4148 |
| 6447 2) | 4822 13080446 | LL4148 |
| 6448 2) | 482213081015 | LLZ-F10 |

# -IC-

| | | |
|---|---|---|
| 7391 | 532213041983 | BC858B |
| 7413 | 4822 13060373 | BC856B |
| 7465 | 4822 209 73832 | TEA5101A/P |

| | | |
|---|---|---|
| 3000 | 4822 051 10152 | 1 k5 2% 0.25W |
| 3001 | 4822 111 90542 | 27k 2% 0.25W |
| 3002 | 4822 111 90542 | 27k 2°/o 0.25W |
| 3010 | 4822 116 52219 | 330ft 5% 0.5W |
| 3011 | 4822 116 52219 | 330ft 5% 0.5W |
| 3029 | 4822 111 90163 | jumper |
| 3030 | 53221 1 190109 | 470ft 2% 0.25W |
| 3035 | 5322 111 90106 | 330ft 2% 0.25W |
| 3036 | 4822 111 90163 | jumper |
| 3037 | 4822 111 90163 | jumper |
| 3040 | 4822 116 52219 | 330ft 5% 0.5W |
| 3042 | 4822 111 90163 | jumper |
| 3043 | 4822 111 90163 | jumper |
| 3044 | 48221 1 190163 | jumper |
| 3045 | 4822 111 90163 | jumper |
| 3046 | 4822 116 81816 | jumper |
| 3050 | 4822 111 30504 | 6ft8 5% 0.33W |
| 3060 | 4822 111 90249 | 10k 2% 0.25W |
| 3061 | 4822 116 52279 | 4k3 5% 0.5W |
| 3062 | 4822 111 90154 | 270ft 2% 0.25W |
| 3063 | 4822 116 52217 | 270ft 5% 0.5W |
| 3064 | 5322 111 90109 | 470ft 2% 0.25W |
| 3067 | 4822 111 90163 | jumper |
| 3071 | 4822051 10102 | 1k 2% 0.25W |
| 3075 1) | 4822 111 90544 | 6k8 2% 0.25W |
| 3075 2) | 4822051 10152 | 1k52%0.25W |
| 3080 2) | 4822051 10102 | 1k 2% 0.25W |
| 3085 2) | 4822051 10152 | 1 k5 2% 0.25W |
| 3100 | 4822 111 30483 | 1ft 5% 0.33W |
| 3101 | 48221 1 190163 | jumper |
| 3103 | 48221 1 190163 | jumper |
| 31052) | 4822 10020166 | 10k 30% lin 0,1W |
| 3106 1) | 5322 111 90111 | 4k7 2% 0.25W |
| 3107 1) | 5322 111 90268 | 5k1 2% 0.25W |
| 31082) | 4822 111 90572 | 5k6 2% 0.25W |
| 31092) | 48221 1 190163 | jumper |
| 31102) | 48221 1 190249 | 10k 2% 0.25W |
| 3111 2) | 4822 111 90253 | 12k 2% 0.25W |
| 3112 2) | 53221 1 190106 | 330ft 2% 0.25W |
| 3113 2) | 4822 111 90171 | 820ft 2% 0.25W |
| 31142) | 48221 1 190302 | 270k 2% 0.25W |
| 31152) | 4822 111 90163 | jumper |
| 31162) | 4822 111 90572 | 5k6 2% 0.25W |
| 3117 2) | 4822 111 90572 | 5k6 2% 0.25W |
| 31182) | 48221 1 190214 | 100k2%0,25W |
| 3125 | 4822 111 90202 | 68k 2% 0.25W |
| 3140 | 4822 111 90573 | 56k 2% 0.25W |
| 3141 | 4822 111 90573 | 56k 2% 0.25W |
| 3152 | 4822 116 52219 | 330ft 5% 0.5W |
| 3153 | 4822 116 52219 | 330ft 5% 0,5W |
| 3154 | 48221 1 190163 | jumper |
| 3165 | 5322 111 90376 | 4ft7 5% 0.25W |
| 3180 | 4822 116 52228 | 680ft 5% 0.5W |
| 3182 | 48221 1 190162 | 680ft 2% 0.25W |
| 3190 | 4822 111 90248 | 2k2 2% 0.25W |
| 3191 | 4822 111 90251 | 22k 2% 0.25W |
| 3192 | 48221 1 190251 | 22k 2% 0.25W |
| 3200 | 4822 111 30494 | 2ft7 5% 0.33W |
| 3202 | 4822 111 30508 | 10ft5%0,33W |
| 3205 | 4822 116 52224 | 470ft 5% 0,5W |
| 3206 | 53221 1 190109 | 470ft 2% 0.25W |
| 3210 | 53221 1 190099 | 150k2%0,25W |
| 3211 | 48221 1 190197 | 220k 2% 0.25W |
| 3216 | 4822 111 90245 | 510ft 2% 0.25W |
| 3218 | 4822051 10102 | 1k 2% 0.25W |
| 3230 | 5322 111 90108 | 39k 2% 0,25W |
| 3270 | 5322 111 90108 | 39k 2% 0.25W |
| 3275 | 53221 1 190109 | 470ft 2% 0.25W |
| 3276 | 4822051 10102 | 1 k 2°/° 0,25W |
| 3280 | 53221 1 190106 | 330ft 2% 0.25W |
| 3299 2) | 48221 1 190163 | jumper |
| 3300 | 4822 111 30497 | 3ft9 5% 0.33W |
| 3301 | 48221 1 190163 | jumper |
| 3305 | 48221 1 190163 | jumper |
| 3310 | 4822051 10102 | 1k 2% 0.25W |
| 3312 | 4822 111 90249 | 10k2%0,25W |
| 3321 | 4822 111 90163 | jumper |
| 3322 | 48221 1 190163 | jumper |
| 3324 | 48221 1 190163 | jumper |
| 3325 | 4822 111 90163 | jumper |
| 3330 | 4822 111 30494 | 2ft7 5°/o 0.33W |
| 3331 | 48221 1 190214 | 100k 2% 0.25W |
| 3332 | 4822 111 90214 | 100k 2% 0.25W |
| 3333 | 4822 111 90543 | 47k 2% 0.25W |
| 3334 | 4822 111 90163 | jumper |
| 3335 | 4822 111 90571 | 3k9 2% 0.25W |
| 3340 | 4822 111 30494 | 2ft7 5% 0.25W |
| 3345 2) | 5322 111 90118 | 8k2 2% 0.25W |
| 3345 1) | 5322 111 90111 | 4k7 2% 0.25W |
| 3350 | 4822 111 30508 | 10ft5%0,33W |
| 3352 | 48221 1 190163 | jumper |
| 3356 1) | 4822 111 90248 | 2k2 2% 0.25W |
| 3356 2) | 4822051 10102 | 1k 2% 0.25W |
| 3357 1) | 4822 111 90248 | 2k2 2% 0.25W |
| 3357 2) | 4822051 10102 | 1k 2% 0.25W |
| 3358 1) | 4822 111 90249 | 10k 2% 0.25W |
| 3358 2) | 4822 111 90572 | 5k6 2% 0.25W |
| 3359 1) | 4822 111 90249 | 10k 2% 0.25W |
| 3359 2) | 4822 111 90572 | 5k6 2% 0.25W |
| 3363 | 48221 1 190163 | jumper |
| 3366 | 5322 111 90111 | 4k7 2% 0.25W |
| 3367 | 5322 111 90111 | 4k7 2% 0.25W |
| 3370 | 5322 111 90111 | 4k7 2% 0.25W |
| 3371 | 5322 111 90111 | 4k7 2% 0.25W |

## -L-

| | | |
|---|---|---|
| 5075 | 4822 157 52511 | 0,83uH trimmer |
| 5085 2) | 4822 157 52511 | 0,83uH trimmer |
| 5250 | 4822 157 51238 | 0.82uH |
| 5251 | 4822 157 51238 | 0,82uH |
| 5317 | 4822 157 53575 | 3,3uH |
| 5325 | 4822 15220677 | 3.3uH |

## -D-

| | | |
|---|---|---|
| 6030 | 4822 13080954 | BZV55C5V6 |
| 6031 | 4822 130 80446 | LL4148 |
| 6035 | 4822 13081027 | LLZ-C11 |
| 6114 | 4822 13080954 | BZV55-C5V6 |
| 6190 | 4822 13030621 | 1N4148 |
| 6312 | 5322 13034953 | BB405B |

## -IC-

| | | |
|---|---|---|
| 7030 | 5322 13041983 | BC858B |
| 7031 | 5322 13044921 | BD943 |
| 7035 | 4822 13061207 | BC848 |
| 7040 | 5322 209 10883 | PCF8574P |
| 7060 | 5322 13042136 | BC848C |
| 7065 | 4822 13060514 | BC859B |
| 7070 | 4822 209 73756 | U2829B |

REMARKS

1) only for PAL-I sets
2) not for PAL-I sets

Various parts

| | | |
|---|---|---|
| 1031 | 4822253 10064 | fuse T0.4A |
| 10702) | 482224270714 | filter 5,5 MHz |
| 1071 1) | 482224271713 | filter 6,0 MHz |
| 10802) | 4822 242 70485 | filter 5,742 MHz |
| 1100 | 5322 242 72349 | crystal 10.000 Mhz |
| 1205 1) | 4822 242 72303 | filter TH316BQM-2110 |
| 12052) | 4822 242 72301 | filter TH316BOM-2080 |
| 1220 1) | 4822 242 72347 | crystal 6.552 MHz |
| 12202) | 4822 242 72302 | crystal 5,850 MHz |
| 1275 | 4822 242 72304 | crystal 5,824 MHz |

-C-

| | | |
|---|---|---|
| 2000 | 482212440248 | 10pF20%63V |
| 2020 | 4822 124 40198 | 470pF 20% 16V |
| 2021 | 4822 121 51252 | 470nF 5% 100V |
| 2030 | 4822 12233496 | 100nF 10% 63V |
| 2031 | 4822 12440849 | 330pF 20% 16V |
| 2032 | 4822 12441584 | 100pF20%10V |
| 2033 | 4822 12233496 | 100nF 10% 63V |
| 2035 | 4822 12441762 | 33pF 20% 16V |
| 2040 | 4822 122 33496 | 100nF 10% 63V |
| 2050 | 4822 12233483 | 33nF 10% 63V |
| 2060 | 5322 12231647 | 1nF 10% 63V |
| 2065 | 4822 12232507 | 6,8pF 5% 50V |
| 2066 | 5322 12231647 | 1nF 10% 63V |
| 2067 | 4822 12233496 | 100nF 10% 63V |
| 2070 | 482212233496 | 100nF 10% 63V |
| 2071 | 4822 12233205 | 12pF 10% 63V |
| 2072 | 4822 12231797 | 22nF 10% 63V |
| 2073 | 4822 12231797 | 22nF 10% 63V |
| 20751) | 4822 121 51231 | 820pF 1%400V |
| 2075 2) | 4822 121 43066 | 1nF1%400V |
| 2080 2) | 4822 12232482 | 22pF 5% 63V |
| 2082 2) | 4822 12231797 | 22nF 10% 63V |
| 2083 2) | 4822 12231797 | 22nF 10% 63V |
| 2085 2) | 4822 121 51262 | 910pF 1%400V |
| 2100 | 4822 12233496 | 100nF 10% 63V |
| 2101 | 4822 122 33496 | 100nF 10% 63V |
| 2105 | 4822 121 51252 | 470nF 5% 100V |
| 2107 2) | 4822 12231766 | 120pF5%50V |
| 21082) | 4822 121 43047 | IMF 10% 63V |
| 21092) | 4822 121 43047 | 1pF 10% 63V |
| 21102) | 4822 122 31961 | 68pF 10% 50V |
| 21162) | 4822 12440248 | 10pF20%63V |
| 2120 | 4822 121 42408 | 220nF 20% 63V |
| 2125 | 4822 12231916 | 5,6nF 10% 63V |
| 2140 | 482212441641 | 33pF20% 16V |
| 2141 | 482212441641 | 33pF20% 16V |
| 2150 | 4822 122 33496 | 100nF 10% 63V |
| 2160 | 4822 121 51252 | 470nF 5% 100V |
| 2162 | 4822 121 51252 | 470nF 5% 100V |
| 2165 | 4822 12441569 | 150pF20%16V |
| 2170 | 4822 122 33483 | 33nF 10% 63V |
| 2171 | 4822 122 33483 | 33nF 10% 63V |
| 2172 | 4822 12231916 | 5,6nF 10% 63V |
| 2173 | 4822 12231916 | 5,6nF 10% 63V |
| 2175 | 4822 122 33482 | 15nF 10% 63V |
| 2176 | 4822 121 51252 | 470nF 5% 100V |
| 2177 | 4822 12233482 | 15nF 10% 63V |
| 2178 | 482212151252 | 470nF 5% 100V |

-C-

| | | |
|---|---|---|
| 2180 | 4822 12441626 | 10uF 20% 16V |
| 2181 | 4822 124 40248 | 10pF 20% 63V |
| 2190 | 4822 124 41626 | 10uF 20% 16V |
| 2200 | 4822 124 41641 | 33pF 20% 16V |
| 2201 | 4822 12232442 | 10nF 10% 50V |
| 2202 | 482212441641 | 33pF 10% 63V |
| 2203 | 482212232442 | 10nF 10% 50V |
| 2206 | 4822 122 32442 | 10nF 10% 50V |
| 2210 | 4822 12441644 | 0,47uF 20% 50V |
| 2211 | 4822 12441644 | 0,47pF 20% 50V |
| 2216 | 4822 122 33205 | 12pF 10% 63V |
| 2217 | 4822 12231774 | 56pF 5% 50V |
| 2218 | 4822 122 31769 | 18pF5%50V |
| 2220 | 4822 125 50045 | 20pF trimmer |
| 2230 | 4822 12441644 | 0,47pF 20% 50V |
| 2231 | 4822 122 32442 | 10nF 10% 50V |
| 2240 | 4822 122 32442 | 10nF 10% 50V |
| 2241 | 4822 122 32442 | 10nF 10% 50V |
| 2242 | 4822 122 33496 | 100nF 10% 63V |
| 2243 | 4822 12233496 | 100nF 10% 63V |
| 2250 | 4822 12233637 | 220pF 10% 50V |
| 2251 | 4822 122 33637 | 220pF 10% 50V |
| 2260 | 4822 122 33496 | 100nF 10% 63V |
| 2261 | 4822 122 33496 | 100nF 10% 63V |
| 2263 | 4822 12232442 | 10nF 10% 50V |
| 2270 | 4822 12441644 | 0.47pF 20% 50V |
| 2271 | 4822 122 32442 | 10nF 10% 50V |
| 2275 | 4822 12231774 | 56pF 5% 50V |
| 2276 | 4822 122 32444 | 33pF 5% 50V |
| 2277 | 4822 122 31769 | 18pF5%50V |
| 2280 | 4822 122 32504 | 15pF5%50V |
| 2290 | 4822 122 32504 | 15pF 5% 50V |
| 2291 | 4822 12232504 | 15pF 5% 50V |
| 2300 | 4822 12233496 | 100nF 10% 63V |
| 2310 | 4822 12233496 | 100nF 10% 63V |
| 2312 | 4822 12231772 | 47pF 5% 50V |
| 2315 | 4822 125 50045 | 20pF trimmer |
| 2317 | 4822 12232442 | 10nF 10% 50V |
| 2318 | 4822 122 31972 | 39pF 5% 50V |
| 2325 | 4822 122 31961 | 68pF 5% 63V |
| 2330 | 4822 12441506 | 47pF 20% 16V |
| 2331 | 4822 12231797 | 22nF 10% 63V |
| 2340 | 4822 122 33496 | 100nF 10% 63V |
| 2341 | 4822 124 41506 | 47pF 20% 16V |
| 2345 | 4822 12231797 | 22nF 10% 63V |
| 2350 | 4822 12441506 | 47pF 20% 16V |
| 2352 | 4822 12231797 | 22nF 10% 63V |
| 2353 | 4822 12231797 | 22nF 10% 63V |
| 2356 1) | 4822 122 31797 | 22nF 10% 63V |
| 2356 2) | 4822 12233608 | 39nF 10% 63V |
| 2357 1) | 4822 12231797 | 22nF 10% 63V |
| 2357 2) | 4822 122 33608 | 39nF 10% 63V |
| 2358 1) | 4822 122 32856 | 8.2nF 10% 63V |
| 2358 2) | 4822 12231759 | 18nF 10% 63V |
| 2359 1) | 4822 122 32856 | 8,2nF 10% 63V |
| 2359 2) | 4822 12231759 | 18nF 10% 63V |
| 23681) | 5322 12231647 | 1nF 10% 63V |
| 23691) | 5322 12231647 | 1nF 10% 63V |
| 2370 | 4822 122 32999 | 2,2nF 5% 63V |
| 2371 | 4822 12232999 | 2,2nF 5% 63V |
| 2372 | 4822 126 10171 | 2,7nF 5% 63V |
| 2373 | 4822 126 10171 | 2.7nF 5% 63V |
| 2374 | 4822 12231773 | 560pF 5% 50V |
| 2375 | 4822 12231773 | 560pF 5% 50V |
| 2380 | 4822 121 51252 | 470nF 5% 100V |
| 2381 | 4822 121 51252 | 470nF 5% 100V |

1000 CARRIER PANEL

REMARK(S

| | |
|---|---|
| 1) | only for MULT! FRANCE sets |
| 2) | not for MULTI PRANCEE sets |
| 3) | only for SECAM/PAL sets |
| 4) | not for SECAM/PAL sets |
| 5) | only for PAL BG sets |
| 6) | not for PAL BG sets |
| 7) | only for PAL BG NICAM |
| 8) | not for PAL BG NICAM |
| 9) | only for PAL I |
| 10) | not for PAL I |
| 11) | only for PAL ITALY |
| 12) | not for PAL ITALY |
| 13) | only for blackline sets |
| 14) | not for blackline sets |

Mechamcai parts

| | | |
|---|---|---|
| | 4822 492 63733 | springfix. TDA1521 |
| | 4822 49270143 | spring fix. transistor |
| 10 | 4822 265 30389 | 2p male degaussing |
| | 4822 267 40794 | 3p female degaussing |
| 11 | 4822 265 40596 | 2p male mains |
| | 4822 290 60262 | 2p female mains |
| 13 | 4822 265 30378 | 4p male |
| | 4822 267 50824 | 4p female |
| 14 | 4822 290 40295 | 7p male |
| | 4822 265 40252 | 7p female |
| 15 | 4822 265 40421 | 6p male |
| | 4822 267 30546 | 6p female |
| 16 | 4822 264 40207 | 3p male |
| | 4822 267 40794 | 3p female |
| 17 | 4822 267 50591 | 6p male gold plated |
| | 4822 265 40469 | 6p female gold plated |
| 18 | 482226450148 | 8p male gold plated |
| | 4822 265 40471 | 8p female gold plated |
| 19 | 4822 264 40239 | 3p male |
| | 4822 290 40284 | 3p female |
| 22 | 4822 267 40666 | 3p male |
| | 4822 267 40794 | 3p female |
| 23 | 4822 264 40207 | 3p male |
| | 4822 267 40794 | 3p female |
| 24 | 4822 264 40207 | 3p male |
| | 4822 267 40794 | 3p female |
| 26 | 4822 267 40878 | 3p male |
| | 4822 265 30499 | 3p female |
| 27 | 4822 265 40821 | 7p male |
| | 4822 267 50883 | 7p female |
| 31 | 4822 218 20849 | foil keyboard |
| 33 | 4822 276 12445 | mains switch |
| 35 | 4822 267 20387 | socket SVHS |
| 36 | 4822 466 92299 | insulator 25X32mm |
| 39 | 4822 267 20355 | socket CVBS/AUDIO STEREO |
| 43 | 4822 256 30274 | fuse holder |
| 45 | 4822 273 30324 | switch SK4 |
| 48 | 4822 267 60243 | EURO-connector |
| 81 | 4822 535 30095 | eyelet 1,98X0.18X2,29mm |
| 82 | 4822 535 30096 | eyelet 1,52XO,18X2,23mm |
| 135 | 482241026538 | knob assy 8 fold |
| 136 | 4822 256 91373 | holder TXT PANEL |
| 150 | 482225691541 | holder SOUND PANEL |

Various parts

| | | |
|---|---|---|
| 100010) | 4822 210 10365 | UV816 |
| 10009) | 482221010364 | U944/L |

Various par

| | | |
|---|---|---|
| 1002 | 4822 526 10405 | ferrite bead for D6630.D6640.D6641 |
| 1003 | 482221222983 | infra red receiver |
| 1015 1) | 4822 242 72212 | filter OPWG3950 |
| 10155) | 4822 242 72495 | filter OFWG3251 |
| 10157) | 4822 242 72554 | filter OFWG3254 |
| ,10159) | 4822 242 72553 | filter OFWJ3251 |
| 10163.11) | 4822 242 72374 | filter OFWG1961 |
| 1020 3.11) | 4822 242 72375 | filter OFWG9250 |
| 1030 10) | 4822 242 72211 | filter 5.5MHz |
| 1031 1) | 4822 153 30025 | filter 6.0MHz |
| 1352 | 4822 242 70933 | crystal 4.433619 MHz |
| 1534 | 4822 071 53151 | fuse T0.315A |
| 1559 | 4822 253 10052 | fuseT1A |
| 1600 | 482225330025; | fuse T2A |
| 1601 | 4822 253 20089 | fuse T0.630A |
| 1760 | 4822 242 70831 | crystal 4.0 MHz |

-1^

| | | |
|---|---|---|
| 2001 | 4822 124 40195 | 150uF20% 16V |
| 2002 | 4822 122 31765 | 100pF 5% 50V |
| 2003 | 4822 12231765 | 10OpF 5% 50V |
| 2004 | 4822 122 31784 | 4.7nF 10% 50V |
| 2005 | 4822 12233496 | 100nF 10% 63V |
| 20063,11) | 4822 122 31784 | 4,7nF 10% 50V |
| 2007 | 4822 12233104 | 100nF 10% 63V |
| 2008 1) | 4822 124 40433 | 47uF 20% 25V |
| 2009 | 4822 12440433 | 47uF 20% 25V |
| 2010 3,11) | 4822 12231784 | 4,7nF 10% 50V |
| 2013 | 4822 124 40242 | 1 uF 20% 63V |
| 2014 | 4822 122 31797 | 22nF 10% 63V |
| 2016 1) | 4822 12232504 | 15pF 5% 50V |
| 2018 | 4822 12231784 | 4,7nF 10% 50V |
| 2019 1) | 4822 12231769 | 18pF 5% 50V |
| 2020 1) | 4822 12231774 | 56pF 5% 50V |
| 2021 1) | 4822 12232504 | 15pF 5% 50V |
| 2022 | 4822 122 31784 | 4,7nF 10% 50V |
| 2023 | 4822 12231784 | 4.7nF 10% 50V |
| 2024 | 5322 121 42498 | 680nF 5% 63V |
| 2030 1) | 4822 121 51252 | 470nF 5% 63V |
| 2031 9) | 4822 122 31349 | 68pF 2% 100V |
| 2032 9) | 4822 12231052 | 8.2pF3% 100V |
| 2033 | 4822 122 33104 | 100nF 10% 63V |
| 2034 | 4822 12233205 | 12pF 10% 63V |
| 2035 1) | 4822 122 32083 | 8,2pF 5% 50V |
| 2036 1) | 4822 122 31784 | 4,7nF 10% 50V |
| 2037 1) | 4822 12231784 | 4,7nF 10% 50V |
| 2039 | 4822 124 40849 | 330uF 20% 16V |
| 2040 1) | 4822 12231784 | 4,7nF 10% 50V |
| 2041 | 4822 12233104 | 100nF 10% 63V |
| 2042 | 4822 121 42408 | 220nF 5% 63V |
| 2043 | 4822 12231797 | 22nF 10% 63V |
| 2044 | 4822 12233104 | 100nF 10% 63V |
| 2046 1) | 4822 122 31784 | 4,7nF 10% 50V |
| 2047 1) | 4822 12231784 | 4,7nF 10% 50V |
| 2048 1) | 4822 12233465 | 39pF 2% |
| 2049 1) | 4822 122 33465 | 39pF 2% |
| 2050 1) | 4822 12233471 | 12pF 2% |
| 2051 1) | 4822 12232082 | 4,7pF 5% 50V |
| 2053 1) | 4822 12233679 | 120pF2%50V |
| 2054 1) | 4822 12231797 | 22nF 10% 63V |
| 2055 1) | 4822 122 33476 | 220pF 2% 50V |
| 2056 1) | 4822 12233473 | 27pF 2% |
| 2057 1) | 4822 12233469 | 10pF5% |
| 2058 1) | 4822 12233681 | 15pF 2% 50V |

## -C-

| | | |
|---|---|---|
| 20591) | 4822 12233471 | 12pF2% |
| 20681) | 4822 122 32082 | 4.7pF 5% 50V |
| 20691) | 4822 122 31825 | 27pF 10% 50V |
| 20701) | 4822 12231784 | 4.7nF 10°'o 50V |
| 2071 1) | 4822 12231797 | 22nF 10% 63V |
| 20721) | 4822 122 31797 | 22nF 10% 63V |
| 2127 | 4822 12440195 | 150uF20% 16V |
| 21292.10) | 4822 122 31784 | 4,7nF 10% 50V |
| 213010) | 4822 12440435 | 10pF20%50V |
| 2131 10) | 4822 12440246 | 4.7pF 20% 63V |
| 2132 10) | 4822 122 31784 | 4.7nF 10% 50V |
| 2133 10) | 4822 122 33496 | 100nF 10% 63V |
| 2270 | 4822 122 33104 | 100nF 10% 63V |
| 2271 | 4822 122 31797 | 22nF 10% 63V |
| 2272 | 4822 12232597 | 6.8nF 10% 63V |
| 2273 | 4822 12232597 | 6.8nF 10% 63V |
| 2274 | 4822 12231797 | 22nF 10% 63V |
| 2275 | 4822 12231797 | 22nF 10% 63V |
| 2276 | 4822 122 31797 | 22nF 10% 63V |
| 2279 | 4822 12233104 | 100nF 10% 63V |
| 2280 | 4822 122 33104 | 100nF 10% 63V |
| 2281 | 4822 122 31797 | 22nF 10% 63V |
| 2283 | 4822 124 40849 | 330uF 20% 16V |
| 2285 | 4822 124 41525 | 100pF20% 25V |
| 2286 | 4822 121 51252 | 470nF 5% 63V |
| 2287 | 4822 121 51252 | 470nF 5% 63V |
| 2290 | 4822 124 41677 | 680pF 20% 25V |
| 2291 | 4822 12441677 | 680pF 20% 25V |
| 2293 | 4822 12441678 | 22pF 20% 25V |
| 2301 | 4822 12233104 | 100nF 10% 63V |
| 2302 | 4822 122 33104 | 100nF 10% 63V |
| 2303 | 5322 12231647 | 1nF 10% 63V |
| 2304 | 4822 12231797 | 22nF 10% 63V |
| 2305 | 4822 122 32442 | 10nF 50V |
| 2306 | 4822 121 41857 | 10nF 5% 100V |
| 2307 | 4822 12233104 | 100nF 10% 63V |
| 2310 1,3) | 4822 12233104 | 100nF 10% 63V |
| 2311 1,3) | 4822 124 40242 | 1 MF 20% 63V |
| 2312 1.3) | 4822 12440242 | 1 yF 20% 63V |
| 2313 1,3) | 4822 12233104 | 100nF 10% 63V |
| 2314 1.3) | 4822 122 31765 | 100pF5%50V |
| 2315 1.3) | 4822 12231775 | 680pF 5% 50V |
| 2316 1.3) | 4822 122 33481 | 1,8nF 15% |
| 2317 1,3) | 4822 12233104 | 100nF 10% 63V |
| 2318 1,3) | 4822 12233104 | 100nF 10% 63V |
| 2321 1,3) | 4822 12233683 | 100pF 5% 63V |
| 23221.3) | 4822 12232878 | 56pF 5% 50V |
| 2323 1,3) | 4822 12233104 | 100nF 10% 63V |
| 23241,3) | 4822 122 33104 | 100nF 10% 63V |
| 23251.3) | 4822 122 31807 | i200pF5%50V |
| 23261,3) | 4822 122 31807 | 1200pF 5% 50V |
| 23271,3) | 4822 12232444 | 33pF 5% 50V |
| 23281,3) | 482212232444 | 33pF 5% 50V |
| 2330 | 4822 12233104 | 100nF 10% 63V |
| 2331 | 4822 12233496 | 100nF 10% 63V |
| 2332 | 5322 121 42661 | 330nF 5% 63V |
| 2334 | 4822 12231965 | 220pF 5% 63V |
| 2335 | 4822 121 51252 | 470nF 5% 63V |
| 2337 | 5322 121 42386 | 10OnF 5% 63V |
| 2338 | 5322 121 42386 | 100nF 5% 63V |
| 2339 | 5322 121 42386 | 100nF 5% 63V |
| 2340 | 482212440242 | 1 MF 20% 63V |
| 2341 | 4822 12233104 | 100nF 10% 63V |
| 2342 | 4822 12233104 | 100nF 10% 63V |
| 2343 | 4822 12231965 | 220pF 5% 63V |
| 2344 | 482212233104 | 100nF 10% 63V |

## Ct-

| | | |
|---|---|---|
| 2345 | 4822 12233104 | 100nF 10%63V |
| 2346 | 5322 121 42386 | 100nF 5% 63V |
| 2349 | 482212440753 | 6.8pF 20% 63V |
| 2350 | 4822 124 40242 | IMF 20% 63V |
| 2351 | 4822 122 33104 | 100nF 10% 63V |
| 2352 | 4822 122 32504 | 15pF 5% 50V |
| 2353 | 4822 122 33104 | 100nF 10% 63V |
| 2355 | 482212231916 | 5.6nF 10% 63V |
| 2356 | 4822 122 33104 | 100nF 10% 63V |
| 2357 | 482212232504 | 15pF 5% 50V |
| 2361 | 4822 122 31797 | 22nF 10% 63V |
| 2362 | 4822 122 31965 | 220pF 5% 63V |
| 2363 | 4822 122 32442 | 10nF 50V |
| 2364 | 4822 122 33104 | 100nF 10% 63V |
| 2365 | 482212232082 | 4.7pF 5% 50V |
| 2366 | 4822 122 33104 | 100nF 10% 63V |
| 2367 | 4822 122 31772 | 47pF 5% 50V |
| 2369 | 4822 124 40198 | 470pF 20% 16V |
| 2370 | 4822 124 22606 | 68uF 20% 16V |
| 2371 | 4822 12233104 | 100nF 10% 63V |
| 2372 | 4822 12233104 | 100nF 10% 63V |
| 2373 | 4822 122 33104 | 100nF 10% 63V |
| 2374 | 4822 122 33104 | 100nF 10% 63V |
| 2375 | 4822 12233104 | 100nF 10% 63V |
| 2376 | 4822 12440433 | 47^F 20% 25V |
| 2378 | 4822 12231772 | 47pF 5% 50V |
| 2379 | 4822 122 33104 | 100nF 10% 63V |
| 2382 | 4822 122 31797 | 22nF 10% 63V |
| 2399 | 4822 12231765 | 100pF 5% 50V |
| 2421 | 4822 122 33104 | 100nF 10% 63V |
| 2422 | 4822 12233104 | 100nF 10% 63V |
| 2423 | 4822 12233104 | 100nF 10% 63V |
| 2431 | 4822 121 51473 | 470nF 20% 63V |
| 2432 | 4822 122 33104 | 100nF 10% 63V |
| 2433 | 4822 122 31727 | 470pF 5% 63V |
| 2434 | 4822 12233104 | 100nF 10% 63V |
| 2435 | 4822 12233104 | 100nF 10% 63V |
| 2436 | 4822 12231727 | 470pF 5% 63V |
| 2437 | 5322 122 31842 | 330pF 5% 63V |
| 2438 | 4822 12231768 | 180pF 5% 50V |
| 2439 | 4822 122 31768 | 180pF5%50V |
| 2440 | 4822 12231765 | 10OpF 5% 50V |
| 2441 | 4822 122 31765 | 100pF5%50V |
| 2442 | 482212151252 | 470nF 5% 63V |
| 2443 | 482212151252 | 470nF 5% 63V |
| 2445 | 4822 122 33104 | 100nF 10%63V |
| 2451 | 4822 122 33496 | 100nF 10% 63V |
| 2455 | 4822 12232442 | 10nF 50V |
| 2456 | 4822 124 40246 | 4,7pF 20% 63V |
| 2458 | 4822 121 42937 | 2,7nF 1% 250V |
| 2459 | 4822 122 33496 | 100nF 10% 63V |
| 2460 13) | 4822 12231727 | 470pF 5% 63V |
| 246014) | 4822 122 31771 | 390pF 5% 50V |
| 2461 | 4822 12231797 | 22nF 10% 63V |
| 2462 13) | 4822 122 31965 | 220pF 5% 63V |
| 2462 14) | 4822 12231768 | 180pF 5% 50V |
| 2464 13) | 4822 12233104 | 100nF 10% 63V |
| 2465 | 4822 124 40195 | 150nF20% 16V |
| 2466 | 4822 12440753 | 6,8(JF 20% 63V |
| 2467 | 4822 122 33496 | 100nF 10%63V |
| 2468 | 4822 124 40244 | 2.2pF 20% 63V |
| 2469 | 4822 124 41678 | 22pF 20% 25V |
| 2470 | 4822 122 31772 | 47pF 5% 50V |
| 2471 | 5322 121 42661 | 330nF 5% 63V |
| 2473 | 5322 121 42661 | 330nF 5% 63V |
| 2475 | 4822 12231797 | 22nF 10%63V |

-R-

| | | |
|---|---|---|
| 3437 | 4822051 10101 | 1000 2% 0.25W |
| 3451 | 4822051 10222 | 2k2 2°° 0.25W |
| 3453 | 4822 11652269 | 3k3 5% 0,5W |
| 3454 | 4822051 10221 | 2200 2% 0.25W |
| 3455 | 4822 051 10472 | 4k7 2°/° 0.25W |
| 3456 | 4822 051 10682 | 6k8 2°/o 0.25W |
| 3457 | 4822 10020166 | 10k 30% UN 0,1W |
| 3458 | 4822 051 10303 | 30k 2°° 0.25W |
| 345913) | 4822051 10155 | 1 M5 5% 0.25W |
| 345914) | 4822051 10275 | 2M7 5% 0.25W |
| 3460 | 4822051 10124 | 120k2°/o0.25W |
| 346213) | 4822 051 10223 | 22k 2% 0.25W |
| 346214) | 4822 051 10273 | 27k 2°/° 0.25W |
| 3463 | 4822051 10183 | 18k 2% 0.25W |
| 3464 | 4822 051 10223 | 22k 2% 0.25W |
| 346513) | 4822 111 90368 | 680k 2% 0.25W |
| 346514) | 4822 051 10824 | 820k 2% 0.25W |
| 3466 | 4822051 10122 | 1 k2 2% 0.25W |
| 3468 | 4822 051 10682 | 6k8 2% 0.25W |
| 3469 | 4822 051 10229 | 220 2% 0.25W |
| 3470 | 4822051 10332 | 3k3 2% 0.25W |
| 3471 13) | 4822 1 1 652304 | 82k 5% 0.5W |
| 3471 14) | 48221 1 652242 | 130k 5% 0.5W |
| 3472 | 482210011465 | 200k 30% LIN |
| 347313) | 4822 1 1 652252 | 180k 5% 0.5W |
| 3473 14) | 4822 11652258 | 220k 5% 0.5W |
| 347413) | 4822051 10122 | 1 k2 2% 0.25W |
| 347414) | 4822051 10152 | 1 k5 2% 0.25W |
| 3475 | 4822051 10681 | 6800 2% 0.25W |
| 347613) | 4822 051 10392 | 3k9 2% 0.25W |
| 347614) | 4822 051 10562 | 5k6 2% 0.25W |
| 3477 | 4822 11652264 | 27k 5% 0,5W |
| 3478 | 4822 051 10008 | jumper |
| 3500 | 4822051 10123 | 12k2%0,25W . |
| 3501 | 4822 1 1 652199 | 68Q 5% 0.5W |
| 3502 | 4822053 12822 | 8k2 5% 3W |
| 3503 | 4822 050 21508 | 105 1%0,6W |
| 3505 | 4822051 10471 | 4700 2% 0.25W |
| 350613) | 4822051 10154 | 150k 2% 0.25W |
| 350614) | 4822 051 10244 | 240k 2% 0.25W |
| 350713) | 4822 051 10822 | 8k2 2% 0.25W |
| 350714) | 4822051 10123 | 12k2%0,25W |
| 3508 | 4822 051 10228 | 202 5% 0.25W |
| 3509 | 4822051 10228 | 202 5% 0.25W |
| 3510 | 4822 051 10228 | 202 5% 0.25W |
| 3511 | 4822051 10228 | 202 5% 0.25W |
| 3512 13) | 4822 1 1 652243 | 1 k5 5% 0.5W |
| 3512 14) | 4822 1 1 652249 | 1k8 5% 0.5W |
| 3514 | 4822051 10392 | 3k9 2% 0.25W |
| 3515 | 4822 051 10108 | 10 5% 0.25W |
| 351813) | 482205110391 | 3900 2% 0.25W |
| 3518 14) | 482205110271 | 2700 2% 0.25W |
| 3519 13) | 482205110391 | 3900 2% 0,25W |
| 351914) | 4822051 10271 | 2700 2% 0.25W |
| 3520 | 4822051 10681 | 6800 2% 0.25W |
| 3521 | 4822 100 11088 | 5k 30% LIN 0,1 W |
| 3522 | 4822051 10152 | 1k52%0,25W |
| 3523 | 4822 051 10228 | 202 5% 0.25W |
| 3524 | 4822 051 10683 | 68k 2% 0.25W |
| 3525 | 4822 10020166 | 10k 30% UN 0.1W |
| 3526 13) | 4822051 10104 | 100k2%0,25W |
| 3526 14) | 4822051 10563 | 56k 2% 0.25W |
| 3527 | 4822051 10125 | 1 M2 5% 0.25W |
| 3528 | 4822 051 10222 | 2k2 2% 0.25W |
| 3529 | 4822051 10228 | 202 5% 0.25W |
| 3530 | 4822051 10102 | 1k2%0,25W |

-R-

| | | |
|---|---|---|
| 3531 | 4822051 10104 | 100k 2%0,25W |
| 3532 | 4822051 10103 | 10k 2% 0.25W |
| 3535 | 4822 051 10008 | jumper |
| 3540 | 4822 1 1 652186 | 220 5% 0.5W |
| 3542 | 4822 1 1 652269 | 3k3 5% 0.5W |
| 3544 | 4822 1 1 653418 | 2k7 10% 5W |
| 3545 | 4822 051 10829 | 820 2% 0.25W |
| 3550 | 4822 116 81815 | 15k 5% 0.5W |
| 3551 | 4822 11652226 | 5600 5% 0.5W |
| 3552 | 4822 1 1 652226 | 5600 5% 0.5W |
| 3554 | 4822 11652226 | 5600 5% 0.5W |
| 356013) | 4822 1 1 653084 | 18k 1% 0.6W |
| 356014) | 4822 050 22003 | 20k 1% 0,6W |
| 3570 | 482205210159 | 150 5% 0.33W |
| 3575 | 4822052 11278 | 207 5% 0.5W |
| 3577 | 4822052 11278 | 207 5% 0.5W |
| 3578 | 4822 1 1 652226 | 5600 5% 0,5W |
| 3580 | 4822 111 30483 | 10 5% 0.33W |
| 3581 | 4822 111 30483 | 10 5% 0.33W |
| 3582 | 4822 1 1 652226 | 5600 5% 0.5W |
| 3583 | 4822052 10189 | 180 5% 0.33W |
| 3585 | 482205210159 | 150 5% 0.33W |
| 3588 | 482205021501 | 1500 1% 0.6W |
| 3589 | 4822 05021501 | 1500 1% 0.6W |
| 3590 | 4822051 10104 | 100k 2% 0.25W |
| 3591 | 4822 111 90161 | 470k 2% 0.125W |
| 3592 | 4822 051 10681 | 6800 2% 0.25W |
| 3593 | 4822 111 30483 | 10 5% 0.33W |
| 3594 | 4822 111 30483 | 10 5% 0.33W |
| 3595 | 4822 105 11023 | 1k 30% 0.1W |
| 3596 | 4822052 10159 | 150 5% 0.33W |
| 3597 | 4822051 10008 | jumper |
| 3598 | 4822051 10331 | 3300 2% 0.25W |
| 3601 | 4822 11640033 | NTC/PTC |
| 3603 | 4822 05321915 | 9M1 5% 0.5W |
| 3605 | 4822052 10102 | 1 k 5% 0.33W |
| 3606 | 4822052 10102 | 1 k 5% 0.33W |
| 3608 | 4822051 10513 | 51k 2% 0.25W |
| 3609 | 4822 051 10753 | 75k 2% 0.25W |
| 3610 | 4822051 10513 | 51k 2% 0.25W |
| 3611 | 4822 051 10272 | 2k7 2% 0.25W |
| 3613 | 4822 051 10473 | 47k 2% 0.25W |
| 3615 | 4822051 10221 | 2200 2% 0.25W |
| 3616 | 4822 051 10101 | 1000 2% 0.25W |
| 3617 | 4822051 10221 | 2200 2% 0.25W |
| 3618 | 4822 1 1 652297 | 68k 5% 0,5W |
| 3619 | 4822051 10109 | 100 2% 0.25W |
| 3620 | 4822 1 1 652193 | 390 5% 0.5W |
| 3621 | 4822 11652193 | 390 5% 0.5W |
| 3622 | 4822051 10519 | 510 2% 0.25W |
| 3623 | 4822051 10519 | 510 2% 0.25W |
| 3624 | 4822051 10104 | 100k 2% 0.25W |
| 3625 | 4822 11652193 | 390 5% 0.5W |
| 3626 | 482205110104 | 100k2%0,25W |
| 3631 | 4822 1 1 681435 | 120k 1% 0.4W |
| 3633 | 482205110561 | 5600 2% 0.25W |
| 3634 | 4822 051 10472 | 4k7 2% 0.25W |
| 3635 | 4822 100 11348 | 1k 30% LIN |
| 3636 | 4822051 10561 | 5600 2% 0.25W |
| 3647 | 482205021102 | 1k11%0,6W |
| 3648 | 482205110821 | 8200 2% 0.25W |
| 3649 | 4822 051 10229 | 220 2% 0.25W |
| 3650 | 4822 053 10829 | 820 5% 1W |
| 3651 | 4822 051 10122 | 1 k2 2% 0.25W |
| 3652 | 4822051 10221 | 2200 2% 0.25W |
| 3653 | 4822051 10101 | 10OQ 2% 0.25W |

-R-

| | | |
|---|---|---|
| 3654 | 4822053 11181 | 180Q5%2W |
| 3655 | 4822051 10473 | 47k 2% 0.25W |
| 3656 | 4822 051 10473 | 47k 2% 0.25W |
| 3658 | 4822051 10008 | jumper |
| 3659 | 4822 051 10181 | 180Q 2% 0.25W |
| 3660 | 4822 051 10562 | 5k6 2% 0.25W |
| 3661 | 4822 051 10181 | 180Q 2% 0,25W |
| 3662 | 4822 051 10151 | 15002% 0.25W |
| 3663 | 4822 051 10101 | 10002% 0.25W |
| 3664 | 4822 051 10101 | 100Q 2% 0.25W |
| 3665 | 48220511010 3 | 10k2%0,25W |
| 3666 | 4822 051 10008 | jumper |
| 3667 | 4822051 10008 | jumper |
| 3668 | 4822 051 10273 | 27k 2% 0.25W |
| 3669 | 4822 051 10683 | 68k 2% 0.25W |
| 3670 | 4822 11652267 | 30k 5% 0.5W |
| 3671 | 482205110471 | 470Q 2% 0.25W |
| 3672 | 4822 051 10103 | 10k 2% 0.25W |
| 3673 | 482205110182 | 1 k8 2% 0.25W |
| 3674 | 4822 051 10008 | jumper |
| 3675 | 4822 051 10008 | jumper |
| 3676 | 4822051 10008 | jumper |
| 3701 | 4822051 10182 | 1 k8 2% 0.25W |
| 3702 | 4822 1 1652175 | 100Q 5% 0.5W |
| 3703 | 482211652175 | 100Q 5% 0.5W |
| 370413) | 4822 1 1 652291 | 56k 5% 0.5W |
| 370414) | 4822 11652175 | 100Q 5% 0.5W |
| 3705 | 4822 051 10123 | 12k 2% 0.25W |
| 3706 | 4822 051 10472 | 4k7 2% 0.25W |
| 3707 | 4822051 10472 | 4k7 2% 0.25W |
| 3709 | 482205110912 | 9k1 2% 0.25W |
| 3710 | 4822 051 10273 | 27k 2% 0.25W |
| 3711 | 4822 051 10472 | 4k7 2% 0.25W |
| 3714 | 4822 051 10394 | 390k 2% 0.25W |
| 3715 | 4822 051 10824 | 820k 2% 0.25W |
| 3716 | 4822 051 10224 | 220k 2% 0.25W |
| 3719 | 4822 051 10008 | jumper |
| 3721 | 4822051 10008 | jumper |
| 3722 | 4822 051 10008 | jumper |
| 3723 | 4822051 10008 | jumper |
| 3724 | 4822 051 10008 | jumper |
| 3730 | 4822051 10221 | 220Q 2% 0.25W |
| 3731 | 48221 1 652234 | 100k 5% 0.5W |
| 3732 | 4822 051 10223 | 22k 2% 0.25W |
| 3733 | 4822 051 10103 | 10k 2% 0.25W |
| 3734 | 4822051 10333 | 33k 2% 0.25W |
| 3735 | 4822051 10103 | 10k 2% 0.25W |
| 37361) | 4822051 10103 | 10k 2% 0.25W |
| 37371) | 4822051 10103 | 10k 2% 0.25W |
| 3738 | 4822 11652233 | 10k 5% 0.5W |
| 3739 | 4822 11652303 | 8k2 5% 0.5W |
| 3742 | 4822 051 10911 | 91 On 2% 0.25W |
| 3743 | 4822 051 10272 | 2k7 2% 0.25W |
| 3744 | 4822 051 10272 | 2k7 2% 0.25W |
| 3745 | 4822051 10272 | 2k7 2% 0.25W |
| 3750 | 482205110102 | 1 k 2% 0.25W |
| 3751 | 4822 11652215 | 220Q 5% 0.5W |
| 3753 | 4822051 10123 | 12k 2%0,25W |
| 3754 | 4822 051 10273 | 27k 2% 0.25W |
| 3757 | 4822051 10123 | 12k 2% 0.25W |
| 3758 | 4822 051 10473 | 47k 2% 0.25W |
| 3763 | 4822 051 10562 | 5k6 2% 0.25W |
| 3764 | 4822051 10103 | 10k 2% 0.25W |
| 3765 | 4822051 10104 | 100k 2% 0.25W |
| 3766 | 4822051 10104 | 100k 2% 0.25W |
| 3767 | 4822051 10223 | 22k 2% 0,25W |

-R-

| | | |
|---|---|---|
| 3768 | 4822051 10682 | 6k8 2% 0.25W |
| 3769 | 4822 051 10472 | 4k7 2% 0.25W |
| 3770 | 4822051 10103 | 10k 2% 0.25W |
| 3772 | 4822 051 10222 | 2k2 2% 0.25W |
| 3773 | 4822 1 1 652175 | 100Q 5% 0.5W |
| 3776 | 482211652175 | 100Q 5% 0.5W |
| 3777 | 4822 051 10222 | 2k2 2% 0.25W |
| 3778 | 4822 051 10332 | 3k3 2% 0.25W |
| 3780 1) | 4822 051 10221 | 220Q 2% 0.25W |
| 3781 1) | 4822051 10221 | 220Q 2% 0.25W |
| 3782 | 4822 051 10008 | jumper |
| 3783 | 4822 051 10008 | jumper |
| 3784 | 4822 051 10008 | jumper |
| 3789 | 4822 051 10008 | jumper |
| 3790 | 4822 051 10008 | jumper |
| 3844 | 482211652219 | 330Q 5% 0.5W |
| 3850 | 4822 1 1652219 | 330Q 5% 0.5W |
| 3851 | 482211652201 | 75Q 5% 0.5W |
| 3852 | 4822 1 1652219 | 330Q 5% 0.5W |
| 3853 | 4822 1 1652201 | 75Q 5% 0.5W |
| 3854 | 4822 051 10222 | 2k2 2% 0.25W |
| 3855 | 482211652219 | 330Q 5% 0.5W |
| 3856 | 482211652201 | 75Q 5% 0.5W |
| 3857 | 482211652215 | 220Q 5% 0.5W |
| 3858 | 482211652201 | 75Q 5% 0.5W |
| 3859 | 4822 051 10272 | 2k7 2% 0.25W |
| 3860 | 4822051 10331 | 330Q 2% 0.25W |
| 3861 | 4822 051 10682 | 6k8 2% 0.25W |
| 3862 | 4822051 10682 | 6k8 2% 0.25W |
| 3863 | 4822 1 1652264 | 27k 5% 0.5W |
| 3866 | 4822 1 1652199 | 68Q 5% 0.5W |
| 3867 | 4822 051 10472 | 4k7 2% 0.25W |
| 3872 | 4822051 10273 | 27k 2% 0.25W |
| 3873 | 4822051 10123 | 12k 2% 0.25W |
| 3874 | 4822051 10392 | 3k9 2% 0.25W |
| 3877 | 482211652213 | 180Q 5% 0.5W |
| 3878 | 4822051 10561 | 560Q 2% 0.25W |
| 3879 | 482211652213 | 180Q 5%0,5W |
| 3880 | 4822051 10561 | 560Q 2% 0.25W |
| 3881 | 4822 11652222 | 390Q 5% 0.5W |
| 3882 | 4822 11652222 | 390Q 5% 0.5W |
| 3885 | 4822051 10008 | jumper |
| 3889 | 4822 050 26808 | 6Q8 1% 0.6W |
| 3891 | 4822 11652269 | 3k3 5% 0.5W |
| 3892 | 4822 1 1652269 | 3k3 5% 0.5W |
| 3922 | 4822051 10332 | 3k3 2% 0.25W |

| | | |
|---|---|---|
| 5010 5,7,9) | 4822 15220606 | 2.2uH 20% |
| 5010 3,11) | 482215753102 | 1,2uH 20% |
| 5020 1) | 482215753539 | 0.27uH 5% |
| 5031 1) | 482215220667 | 5.6uH 10% |
| 5031 2.10) | 4822 157 52753 | 8.2uH 10% |
| 5031 9) | 482215751999 | 10uH 10% |
| 5034 | 4822 157 53609 | 0.36uH 5% |
| 5035 | 4822 157 53534 | 0,34uH 5% |
| 5036 1) | 482215753537 | 1,35uH 5% |
| 5040 1) | 482215752279 | 33uH 10% |
| 5052 1) | 482215753535 | 0.36uH 5% |
| 5053 1) | 482215753536 | 0.34uH 5% |
| 5054 9) | 482215752286 | 22uH 10% |
| 5068 1) | 482215753538 | 0.75uH 5% |
| 5132 10) | 482215753534 | 0.34uH 5% |
| 5134 10) | 4822 157 52286 | 22uH 10% |
| 5290 | 4822 158 10551 | 27uH 7,5% |

| | | |
|---|---|---|
| 5291 | 4822 15810551 | 27uH 7.5% |
| 5316 1.3) | 4822 157 53543 | 2,35^iH 10% |
| 5321 1.3) | 4822 157 60388 | 10pH 2% |
| 5327 1.3) | 4822 157 51999 | 10pH 10% |
| 5328 1,3) | 4822 157 51999 | IO^H 10% |
| 5330 | 4822 157 60092 | 3,3pH 10% |
| 5331 14) | 4822 051 10008 | jumper |
| 5332 | 4822 157 60092 | 3.3uH 10% |
| 5333 | 4822 15760092 | 3,3^iH 10% |
| 5334 | 4822 15760092 | 3,3pH 10% |
| 5335 | 4822 157 60092 | 3.3pH 10% |
| 5336 13) | 4822 157 60092 | 3,3nH 10% |
| 5337 13) | 4822 157 60092 | 3.3uH 10% |
| 5384 | 4822 157 52258 | 27nH 7,5% |
| 5452 | 4822 152 20678 | 33pH 10% |
| 5534 | 4822 158 10728 | |
| 5541 | 4822 146 10111 | LINE DRIVER |
| 5542 | 4822 157 60387 | 1uH 10% |
| 5545 13) | 4822 140 10399 | L.O.T. |
| 5545 14) | 4822 140 10384 | L.O.T. |
| 5549 | 4822 157 53069 | |
| 5554 13) | 4822 157 62559 | AT4042/93 |
| 5554 14) | 4822 156 21332 | AT4042/51 |
| 5578 | 4822 157 53995 | lOO^H 10% |
| 5582 | 5322 157 52539 | 15^H 7,5% |
| 5588 | 4822 157 52505 | 33nH 10% |
| 5593 | 4822 157 53861 | |
| 5600 13) | 4822 142 40315 | |
| 5600 14) | 4822 157 53348 | |
| 5605 | 4822 157 53995 | 100MH 10% |
| 5606 | 4822 157 53995 | iOOpH 10% |
| 5619 | 4822 15621125 | 3,9pH 10% |
| 5621 | 4822 157 53903 | 180MH 10% |
| 5625 | 4822 15753854 | S.O.P.S. |
| 5631 | 4822 158 10551 | 27pH 7,5% |
| 5632 | 4822 158 10551 | 27uH 7,5% |
| 5701 | 4822 157 52843 | 56^H 5% |

fc|
Vi

| | | |
|---|---|---|
| 6004 | 4822 130 80881 | LLZ-C33 |
| 6018 1) | 4822 13080888 | BA682 |
| 6027 1) | 4822 130 30621 | 1N4148 |
| 6037 1) | 4822 13080888 | BA682 |
| 6051 1) | 4822 130 80888 | BA682 |
| 6052 1) | 4822 13080888 | BA682 |
| 6053 1) | 4822 130 80888 | BA682 |
| 6054 1) | 4822 130 80888 | BA682 |
| 6055 1) | 4822 13080888 | BA682 |
| 6056 1) | 4822 13080888 | BA682 |
| 6058 1) | 4822 130 80888 | BA682 |
| 6066 2,10) | 4822 13030621 | 1N4148 |
| 6280 | 4822 130 81139 | LLZ-C3V3 |
| 6281 | 4822 13081139 | LLZ-C3V3 |
| 6282 | 4822 130 80446 | LL4148 |
| 6283 | 4822 13080446 | LL4148 |
| 6284 | 4822 130 80446 | LL4148 |
| 6285 | 4822 13034195 | BZX79-C13 |
| 6335 | 4822 130 80446 | LL4148 |
| 6350 13) | 4822 130 80446 | LL4148 |
| 6367 | 4822 13080446 | LL4148 |
| 6421 | 4822 13080446 | LL4148 |
| 6455 | 4822 13081138 | LLZ-C2V7 |
| 6456 | 4822 13080446 | LL4148 |
| 6457 | 4822 13030621 | 1N4148 |
| 6465 | 4822 13030621 | 1N4148 |

-D-

| | | |
|---|---|---|
| 6502 | 4822 130 81141 | LL2-C43 |
| 6503 | 4822 13042489 | BYD33G |
| 6518 | 4822 130 80446 | LL4148 |
| 6519 | 4822 13080446 | LL4148 |
| 6546 | 4822 13041275 | BY228/20 |
| 6547 | 4822 130 32058 | BYW95B |
| 6551 | 4822 130 42488 | BYD33D |
| 6560 | 4822 130 80446 | LL4148 |
| 6561 | 4822 13034383 | BZX79-C47 |
| 6570 | 4822 13042606 | BYD33J |
| 6571 | 4822 13042488 | BYD33D |
| 6575 | 4822 130 42489 | BYD33G |
| 6580 | 4822 130 80915 | BYD74C |
| 6585 | 4822 130 42488 | BYD33D |
| 6590 | 4822 130 81141 | LLZ-C43 |
| 6591 | 4822 130 80446 | LL4148 |
| 6592 | 4822 130 81144 | LLZ-C30 |
| 6593 | 4822 130 80446 | LL4148 |
| 6594 | 4822 13080446 | LL4148 |
| 6602 | 4822 13031933 | 1N5061 |
| 6603 | 4822 130 31933 | 1N5061 |
| 6604 | 4822 13031933 | 1N5061 |
| 6605 | 4822 13031933 | 1N5061 |
| 6611 | 4822 130 80446 | LL4148 |
| 6612 | 4822 130 80446 | LL4148 |
| 6613 | 4822 13080446 | LL4148 |
| 6614 | 4822 13080446 | LL4148 |
| 6617 | 4822 13031456 | BZV85-C5V1 |
| 6618 | 4822 13042488 | BYD33D |
| 6621 | 4822 13042488 | BYD33D |
| 6622 | 4822 13080446 | LL4148 |
| 6630 | 4822 130 81175 | BYD74G |
| 6637 | 4822 130 81147 | LLZ-F6V2 |
| 6638 | 4822 130 81145 | LLZ-F2V4 |
| 6640 | 4822 13080914 | BYD74B |
| 6641 | 4822 13080914 | BYD74B |
| 6644 | 4822 13080446 | LL4148 |
| 6645 | 4822 13042488 | BYD33D |
| 6646 | 4822 130 80446 | LL4148 |
| 6648 | 4822 130 81146 | LLZ-F24 |
| 6649 | 4822 130 80446 | LL4148 |
| 6653 | 4822 13080446 | LL4148 |
| 6657 | 4822 130 81143 | LLZ-C20 |
| 6660 7,9) | 4822 13080914 | BYD74B |
| 6660 8,10) | 4822 13042488 | BYD33D |
| 6661 7,9) | 4822 13080914 | BYD74B |
| 6661 8,10) | 4822 13042488 | BYD33D |
| 6662 | 4822 130 80905 | LLZ-F5V1 |
| 6665 | 4822 130 80883 | LLZ-C4V7 |
| 6669 | 4822 130 80446 | LL4148 |
| 6670 | 4822 13020245 | SFOR5D43 |
| 6721 | 4822 13080446 | LL4148 |
| 6722 | 4822 13080446 | LL4148 |
| 6723 | 4822 130 80446 | LL4148 |
| 6726 9) | 4822 13080446 | BAS32L |
| 6727 10) | 4822 130 80446 | LL4148 |
| 6728 1) | 4822 13080446 | LL4148 |
| 6730 | 4822 130 80446 | LL4148 |
| 6741 | 4822 130 80884 | LLZ-C5V1 |
| 6742 | 4822 209 72895 | TLUV5300 |
| 6743 | 4822 13030621 | 1N4148 |
| 6744 | 4822 13030621 | 1N4148 |
| 6745 | 4822 13030621 | 1N4148 |
| 6815 | 4822 13042488 | BYD33D |
| 6864 | 4822 130 80446 | LL4148 |

## -IC-

| | | |
|---|---|---|
| 7020 | 482220972812 | TDA2549/C4 |
| 70271) | 5322 13042012 | BC858 |
| 70301) | 4822 130 61207 | BC848 |
| 7039 | 4822 130 44121 | BC338 |
| 7044 | 4822 130 61207 | BC848 |
| 7130 1) | 482220973219 | TDA4445B |
| 71302,10) | 4822 209 81878 | TDA2545A |
| 7270 | 4822 209 73853 | TDA1521/N4 |
| 7281 | 4822 13061207 | BC848 |
| 7282 | 4822 13061207 | BC848 |
| 7284 | 5322 13042012 | BC858 |
| 7285 | 4822 13042513 | BC858C |
| 7286 | 4822 13042513 | BC858C |
| 7287 | 4822 13042513 | BC858C |
| 7305 | 4822 209 62876 | TDA8451/N6 |
| 7315'1,3) | 4822 209 73214 | TDA8490/N4 |
| 73161,3) | 5322 13041982 | BC848B |
| 7350 | 4822 209 61027 | TDA8390/N5 |
| 7351 | 5322 130 41982 | BC848B |
| 7360 | 4822 209 62878 | TDA8452/N6 |
| 7363 | 5322 13041982 | BC848B |
| 7364 | 5322 13042012 | BC858 |
| 73651) | 5322 13042012 | BC858 |
| 7422 | 5322 13041982 | BC848B |
| 7423 | 5322 13042012 | BC858 |
| 7425 | 4822 209 71512 | TDA4565/V6 |
| 7455 | 5322 13042012 | BC858 |
| 7470 | 4822 209 72363 | TDA2579A/N8 |
| 7500 | 4822 13041344 | BC337-40 |
| 7502 | 4822 13060775 | 2SD1266P |
| 7503 | 4822 13061236 | BD234 |
| 7530 | 4822 130 42705 | BC847 |
| 7533 | 4822 130 60111 | 2SA1359 |
| 7540 | 4822 13042159 | BF819 |
| 7545 | 4822 130 61265 | BU508AF |
| 7591 | 5322 13042012 | BC858 |
| 7593 | 5322 13042012 | BC858 |
| 7594 | 4822 13061207 | BC848 |
| 7612 | 5322 13042136 | BC848C |
| 7614 | 4822 130 80891 | CNX83A |
| 7615 | 4822 13042513 | BC858C |
| 7616 | 5322 13044647 | BC368 |
| 7625 | 4822 13061407 | BUT18AF |
| 7637 | 5322 13042136 | BC848C |
| 7651 | 4822 13042513 | BC858C |
| 7652 | 5322 13042756 | BC857C |
| 7654 | 4822 13042133 | BC817 |
| 7655 | 4822 13042615 | BC817-40 |
| 7656 | 4822 130 61233 | BC857 |
| 7661 | 5322 13044921 | BD943 |
| 7663 | 5322 13042012 | BC858 |
| 7671 | 4822 13061207 | BC848 |
| 77208,10) | 4822 20962161 | TMP47C634N-2475 |
| 7720 7,9) | 482220961152 | TMP47C634N-2675 |
| 7733 | 4822 13061207 | BC848 |
| 77371) | 4822 13061207 | BC848 |
| 7741 1) | 4822 13061207 | BC848 |
| 7750 | 4822 13061207 | BC848 |
| 7754 | 4822 13061207 | BC848 |
| 7757 | 4822 130 61207 | BC848 |
| 7766 | 4822 13061207 | BC848 |
| 7770 | 4822 20973313 | X2402 |
| 7857 | 4822 209 73852 | PMBT2369 |
| 7860 | 4822 209 73852 | PMBT2369 |
| 7861 | 5322 13042012 | BC858 |
| 7870 | 5322 13041982 | BC848B |

### Mechanical parts

| | | |
|---|---|---|
| 10 | 4822 264 40207 | 3p male |
| | 4822 267 40749 | 3p female |
| 11 | 4822 264 40207 | 3p male |
| | 4822 267 40749 | 3p female |
| 12 | 4822 264 40207 | 3p male |
| | 4822 267 40749 | 3p female |
| 13 | 4822 267 40878 | 3p male |
| | 4822 265 30499 | 3p female |
| 14 | 4822 264 40207 | 3p male |
| | 4822 267 40749 | 3p female |
| 15 | 4822 264 40207 | 3p male |
| | 4822 267 40749 | 3p female |
| 16 | 4822 267 40666 | 3p male |
| | 4822 267 40794 | 3p female |
| 40 | 4822 267 20236 | dual jack 3.5mm |
| 41 | 4822 267 20236 | dual jack 3.5mm |
| 42 | 4822 267 30631 | dual cinch |

### -C-

| | | |
|---|---|---|
| 2256 | 5322 121 42927 | 3.9nF 5% 100V |
| 2257 | 5322 121 42927 | 3.9nF 5°o 100V |
| 2267 | 5322 121 42927 | 3,9nF 5% 100V |
| 2268 | 5322 121 42927 | 3.9nF 5°/o 100V |
| 2296 | 5322 121 42927 | 3.9nF 5% 100V |
| 2297 | 5322 121 42927 | 3.9nF 5% 100V |

### -R-

| | | |
|---|---|---|
| 3261 | 4822 053 32478 | 4.7S2 10%4,7W |
| 3262 | 482211652921 | 4k7 1% 0.6W |
| 3263 | 4822 11652758 | 1k 1°/o 0.4W |
| 3264 | 4822 11652921 | 4k7 1% 0.6W |
| 3265 | 4822 11652758 | 1k 1% 0.4W |
| 3266 | 4822 11652175 | 100Q5°/o0.5W |
| 3267 | 4822 11652175 | 100Q 5% 0,5W |

| | | |
|---|---|---|
| 5803 | 482215752825 | 60uH |
| 5814 | 4822 157 53608 | 10uH 10% |
| 5816 | 4822 157 52224 | 15nH 10% |
| 5834 1) | 482215753001 | 27(JH 10% |
| 5847 | 4822 157 51157 | 3.3^H 10% |

## -D-

| | | |
|---|---|---|
| 6809 | 4822 13080446 | LL4148 |
| 6810 | 4822 130 80446 | LL4148 |
| 6811 | 4822 13080446 | LL4148 |
| 6812 | 4822 13080446 | LL4148 |
| 6813 | 4822 130 80906 | LLZ-C7V5 |
| 6814 | 4822 130 80446 | BAS32L |
| 6820 3) | 4822 130 80446 | LL4148 |
| 6847 | 4822 13042489 | BYD33G |
| 6848 | 4822 13080905 | LLZ-F5V1 |
| 6849 3) | 4822 130 | BZV86-2VO |

## -IC-

| | | |
|---|---|---|
| 7800 | 4822 209 62479 | MAB8461P/W196 |
| 7800 3) | 4822 209 62879 | PCF84C81P/065 |
| 7801 | 4822 130 61207 | BC848 |
| 7802 | 4822 13061207 | BC848 |
| 7803 | 5322 13041982 | BC848B |
| 7810 | 4822 209 72681 | KM6264AL-15 |
| 7811 | 5322 130 41982 | BC848B |
| 7812 | 5322 13060159 | BC846B |
| 7820 | 4822 209 73879 | SAA5243P/E/M2 |
| 7830 | 4822 209 72972 | SAA5231/V6 |
| 7831 1) | 482213040962 | BC558A |
| 7832 1) | 482213040937 | BC548B |
| 7846 | 5322 13044921 | BD943 |
| 7849 | 5322 13042012 | BC858 |

REMARKS

1) only for STEREO FRANCE sets
2) not for STEREO FRANGE sets

## Various parts

| | | |
|---|---|---|
| 1161 | 4822 242 70485 | filter 5.742 MHz |
| 1170 | 4822 242 70714 | filter 5.5 MHz |
| 1171 1) | 4822 242 71713 | filter 6.0 MHz |

## -It-

| | | |
|---|---|---|
| 2060 2) | 482212231981 | 33nF 1% |
| 2061 2) | 4822 122 31797 | 22nF 10% 63V |
| 2062 2) | 4822 124 40435 | 10nF 20% 50V |
| 2063 2) | 4822 12231972 | 39pF 5% 50V |
| 2066 2) | 4822 12420725 | 3.3pF 50% 63V |
| 2134 | 4822 122 31971 | 10pF 10% 50V |
| 2160 | 4822 12232765 | 820pF 10°/o 63V |
| 2161 | 4822 122 32482 | 22pF 5% 63V |
| 2162 | 4822 122 31797 | 22nF 10% 63V |
| 2163 | 4822 12231797 | 22nF 10% 63V |
| 2164 1) | 4822 122 31797 | 22nF 10% 63V |
| 2165 | 4822 122 33104 | 100nF 10% 63V |
| 2169 1) | 4822 12231797 | 22nF 10% 63V |
| 2170 | 4822 122 33205 | 12pF 10% 63V |
| 2173 | 4822 12231797 | 22nF 10% 63V |
| 2174 | 4822 12231797 | 22nF 10% 63V |
| 2179 1) | 4822 12232442 | 10nF 50V |
| 2181 1) | 4822 12233475 | 180pF 2% |
| 2182 1) | 482212151231 | 820pF 1% 400V |
| 21822) | 4822 121 43066 | 1nF 1% 400V |
| 2183 | 4822 121 51262 | 910pF 1% 400V |
| 2185 | 4822 12141757 | 470nF 10% 63V |
| 2186 | 4822 12233104 | 100nF 10% 63V |
| 2190 | 4822 124 40242 | 1 ^F 20% 63V |
| 2200 | 4822 122 33479 | 820pF 5% |
| 2201 | 4822 12232891 | 68nF 20% 50V |
| 2202 | 4822 122 32891 | 68nF 20% 50V |
| 2203 | 4822 12420688 | 33^F 50% 16V |
| 2204 | 4822 122 33104 | 100nF 10% 63V |
| 2205 | 4822 121 42936 | 39nF 1% 63V |
| 2206 | 4822 12420697 | 10pF 50% 25V |
| 2207 | 4822 122 31765 | 100pF 5% 50V |
| 2208 | 4822 12233104 | 100nF 10% 63V |
| 2209 | 4822 122 31797 | 22nF 10% 63V |
| 2211 | 4822 12421743 | 150uF 20% 16V |
| 2212 | 4822 121 42936 | 39nF 1% 63V |
| 2213 | 4822 12231797 | 22nF 10% 63V |
| 2214 | 4822 124 20697 | 10pF 50% 25V |
| 2215 | 4822 124 20689 | 68nF 50% 16V |
| 2219 | 4822 12420708 | 10nF 50% 40V |
| 2221 | 4822 12420688 | 33pF 50% 16V |
| 2222 | 4822 124 20688 | 33uF 50% 16V |
| 2229 | 4822 121 51252 | 470nF 5% 63V |
| 2232 | 4822 121 51252 | 470nF 5% 63V |
| 2234 | 4822 121 43235 | 56nF 10% 63V |
| 2235 | 4822 12143235 | 56nF 10% 63V |
| 2236 | 4822 122 32542 | 47nF 10% 50V |
| 2237 | 4822 12231784 | 4.7nF 10% 50V |
| 2238 | 4822 121 51252 | 470nF 5% 63V |
| 2239 | 4822 124 20686 | 4,7pF 50% 16V |
| 2246 | 4822 121 41856 | 22nF 5% 100V |
| 2247 | 4822 121 41856 | 22nF 5% 100V |
| 2250 | 4822 122 33104 | 100nF 10% 63V |
| 2252 | 482212231916 | 5.6nF 10% 50V |
| 2253 | 482212231981 | 33nF 1% 50V |

## -C-

| | | |
|---|---|---|
| 2254 | 4822 122 31782 | 15nF 10°/° 50V |
| 2255 | 4822 12231782 | 15nF 10°/o 50V |
| 2258 | 4822 121 41757 | 470nF 10°/o 63V |
| 2259 | 4822 121 41757 | 470nF 10% 63V |
| 2260 | 48221223191 6 | 5.6nF 10% 50V |
| 2261 | 4822 12440435 | 10uF 20% 50V |
| 2262 | 4822 124 20697 | 10uF 50% 25V |
| 2263 | 4822 122 31981 | 33nF 1% 50V |
| 2264 | 4822 124 21743 | 150uF 20% 16V |
| 2265 | 4822 12233104 | 100nF 10% 63V |
| 2266 | 4822 124 20695 | 470uF 50% 16V |
| 2269 | 48221244043 5 | 10uF 20% 50V |
| 2870 | 4822 124 40435 | 10uF 20% 50V |

## -R-

| | | |
|---|---|---|
| 3060 2) | 53221 1 190109 | 470Q 2% 0.25W |
| 3061 1) | 4822 051 10008 | jumper |
| 3062 2) | 4822 111 90248 | 2k2 2% 0.25W |
| 3063 2) | 4822 111 90205 | 820k 2% 0.25W |
| 3065 2) | 4822 111 90568 | 120k 2% 0.25W |
| 3066 2) | 4822 111 90169 | 560k 2% 0.25W |
| 3067 2) | 4822 111 90575 | 82k 2% 0.25W |
| 3068 1) | 4822 111 90543 | 47k 2% 0.25W |
| 3069 1) | 4822 051 10008 | jumper |
| 3069 2) | 4822 111 90542 | 27k 2% 0.25W |
| 3160 | 4822 111 90157 | 3k3 2% 0.25W |
| 31611) | 4822 051 10008 | jumper |
| 3161 2) | 4822 111 90203 | 680 2% 0.25W |
| 3162 | 4822 051 10008 | jumper |
| 3164 | 4822 051 10008 | jumper |
| 3165 1) | 5322 111 90111 | 4k7 2% 0.25W |
| 31661) | 5322 111 90111 | 4k7 2% 0.25W |
| 3167 1) | 5322 111 90111 | 4k7 2% 0.25W |
| 31691) | 5322 111 90118 | 8k2 2% 0.25W |
| 31702) | 4822 051 10008 | lumper |
| 3171 2) | 4822051 10008 | jumper |
| 3172 | 4822051 10102 | 1 k 2% 0.25W |
| 3173 1) | 4822 051 10008 | jumper |
| 3174 1) | 5322 111 90111 | 4k7 2% 0.25W |
| 3175 1) | 4822 111 90196 | 15k 2% 0.25W |
| 3176 1) | 5322 111 90111 | 4k7 2% 0.25W |
| 31771) | 4822 111 90543 | 47k 2% 0.25W |
| 3178 1) | 48221 1 190544 | 6k8 2% 0.25W |
| 31801) | 5322 111 90111 | 4k7 2% 0.25W |
| 3181 1) | 4822 111 90543 | 47k 2% 0.25W |
| 31822) | 4822 111 90248 | 2k2 2% 0.25W |
| 3182 1) | 48221 1 190571 | 3k9 2% 0.25W |
| 3183 | 4822 111 90248 | 2k2 2% 0.25W |
| 3190 | 4822051 10155 | 1 M5 2% 0.25W |
| 3199 | 4822051 10102 | 1 k 2% 0.25W |
| 3200 | 48221 1 190124 | 82Q 2% 0.25W |
| 3201 | 5322 111 90267 | 33k 2% 0.25W |
| 3202 | 4822 111 90238 | 18k 2% 0.25W |
| 3203 | 4822 111 90573 | 56k 2% 0.25W |
| 3204 | 48221 1 190157 | 3k3 2% 0.25W |
| 3205 | 4822 111 90244 | 1 k3 2% 0.25W |
| 3206 | 48221 1 190162 | 680Q 2% 0.25W |
| 3208 | 4822 111 90249 | 10k 2% 0.25W |
| 3209 | 48221 1 190162 | 680Q 2% 0.25W |
| 3212 | 4822 10020166 | 10k 30%lin 0.1W |
| 3213 | 4822 111 90244 | 1 k3 2% 0.25W |
| 3215 | 4822051 10008 | jumper |
| 3216 | 4822051 10008 | jumper |
| 3217 | 4822 051 10008 | jumper |
| 3219 | 5322 111 90113 | 560Q 2% 0.25W |

## -R-

| | | |
|---|---|---|
| 3220 | 4822 111 90573 | 56k 2% 0.25W |
| 3221 | 4822 111 90573 | 56k 2% 0.25W |
| 3222 | 5322 111 90376 | 4Q7 5% 0.25W |
| 3225 | 5322 111 90106 | 330Q 2% 0.25W |
| 3226 | 4822 051 10008 | jumper |
| 3228 | 5322 111 90106 | 330Q 2% 0.25W |
| 3230 | 4822 051 10008 | jumper |
| 3231 | 4822 111 90251 | 22k 2% 0.25W |
| 3232 | 4822 111 90248 | 2k2 2% 0.25W |
| 3233 | 48221 1 190251 | 22k 2% 0.25W |
| 3234 | 4822 111 90251 | 22k 2% 0.25W |
| 3235 | 4822 111 90205 | 820k 2% 0.25W |
| 3239 | 4822 111 90202 | 68k 2% 0.25W |
| 3240 | 5322 111 90267 | 33k 2% 0.25W |
| 3241 | 48221 1 190542 | 27k 2% 0.25W |
| 3242 | 53221 1 190106 | 330Q 2% 0.25W |
| 3243 | 482210011348 | 1k 30%lin 0.1W |
| 3244 | 5322 111 90106 | 330Q 2% 0.25W |
| 3245 | 4822 100 11348 | 1k 30%lin 0.1W |
| 3246 | 4822 051 10105 | 1M 5%0,25W |
| 3871 | 4822051 10152 | 1 k5 2% 0.25W |
| 3875 | 4822 111 90542 | 27k 2% 0.25W |
| 3876 | 4822 111 90542 | 27k 2% 0.25W |

| | | |
|---|---|---|
| 5182 | 482215752511 | 0,83uH 7% |
| 5183 | 482215752511 | 0.83uH 7% |
| 5200 | 4822 157 52512 | 10.6mH 10% |

## -D-

| | | |
|---|---|---|
| 6061 2) | 4822 13080446 | LL4148 |
| 6062 2) | 4822 130 80446 | LL4148 |
| 6063 2) | 4822 130 80446 | LL4148 |
| 6065 2) | 4822 13080446 | LL4148 |
| 6165 1) | 4822 130 80888 | BA682 |
| 6166 1) | 4822 13080888 | BA682 |
| 6179 1) | 4822 130 80888 | BA682 |
| 6180 | 4822 13080446 | LL4148 |
| 6181 2) | 4822 130 81027 | BZV55-C11 |
| 6190 | 4822 13080446 | LL4148 |

## -IC-

| | | |
|---|---|---|
| 7060 2) | 4822 13042513 | BC858C |
| 7170 | 4822 209 73756 | U2829B |
| 7176 1) | 4822 13061207 | BC848 |
| 7200 | 5322 13041983 | BC858B |
| 7208 | 4822 13061207 | BC848 |
| 7220 | 4822 209 72371 | TDA8405/V4 |
| 7260 | 482220973213 | TDA8425/V4 |
| 7261 | 5322 13042136 | BC848C |
| 7262 | 5322 13042136 | BC848C |

## -IC-

| | | |
|---|---|---|
| 7100 | 4822 209 61026 | TDA8415/V1 |
| 71102) | 4822 130 61207 | BC848 |
| 7112 2) | 5322 13042012 | BC858 |
| 7114 2) | 4822 13061207 | BC848 |
| 7150 | 482220973213 | TDA8425/V4 |
| 7191 | 5322 130 42136 | BC848C |
| 7192 | 5322 13042136 | BC848C |
| 7200 | 4822 209 73558 | TA8662N |
| 7300 | 4822 13061304 | CF70123 |
| 7330 | 4822 209 72545 | SAA7220P/C |
| 7333 | 4822 130 61207 | BC848 |
| 7340 | 4822 209 73236 | TDA1543/N1 |
| 7350 | 4822 209 83163 | LM833N |
| 7351 | 482220983163 | LM833N |

1010 SVHS MODULE

### Mechan cat parts

| | | |
|---|---|---|
| 27 | 4822 265 40821 | 7p male |
| | 4822 265 40252 | 7p female |
| 31 | 4822 267 40878 | 3p male |
| | 4822 267 40794 | 3p female |

### -C-

| | | |
|---|---|---|
| 2900 | 5322 121 42386 | 100nF5%63V |
| 2902' | 4822 12231774 | 56pF 5% 50V |
| 2903 | 4822 12233104 | 100nF 10% 63V |
| 2904 | 4822 12440435 | 10uF20%50V |
| 2905 | 4822 12233104 | 100nF 10% 63V |
| 2906 | 4822 12440435 | 10uF20% 50V |
| 2907 | 4822 12233104 | 100nF 10% 63V |
| 2908 | 4822 12233104 | 100nF 10% 63V |
| 2909 | 4822 122 31961 | 68pF 5% 63V |
| 2910 | 4822 122 33104 | 100nF 10% 63V |
| 2911 | 4822 12441525 | 100uF20%25V |
| 2912 | 482212233104 | 100nF 10% 63V |
| 2913 | 482212231965 | 220pF 5% 63V |
| 2930 | 4822 124 40435 | 10uF20%50V |
| 2931 | 4822 12440435 | 10uF20%50V |
| 2932 | 4822 12440435 | 10uF20%50V |
| 2933 | 4822 12440435 | 10uF20%50V |
| 2934 | 4822 12441525 | 100pF20%25V |

### -CD-

| | | |
|---|---|---|
| 3900 | 5322 111 90113 | 560Q 2% 0.25W |
| 3901 | 5322 111 90113 | 5600 2% 0.25W |
| 3904 | 4822 11652204 | 1k5%0.5W |
| 3905 | 4822 116 52213 | 1800 5%0.5W |
| 3906 | 4822 111 90111 | 4k72%0,25W |
| 3907 | 48221 1 190251 | 22k 2% 0.25W |
| 3908 | 5322 111 90111 | 4k7 2% 0.25W |
| 3909 | 48221 1 190217 | 470 2% 0.25W |
| 3910 | 48221 1 190217 | 470 2% 0.25W |
| 3911 | 4822 116 52175 | 10005%0,5W |
| 3912 | 4822051 10102 | 1 k 2% 0.25W |
| 3913 | 4822 111 90249 | 10k2%0,25W |
| 3914 | 4822 111 90543 | 47k 2% 0.25W |
| 3915 | 53221 1 190106 | 3300 2% 0.25W |
| 3916 | 5322 111 90109 | 4700 2% 0.25W |
| 3917 | 48221 1 190217 | 470 2% 0.25W |
| 3918 | 4822 051 10102 | 1 k 2% 0.25W |
| 3919 | 4822 111 30531 | 680 5% 0.33W |

### -R-

| | | |
|---|---|---|
| 3920 | 48221 1 190253 | 12k 2% 0.25W |
| 3921 | 5322 111 90111 | 4k7 2% 0.25W |
| 3922 | 5322 111 90096 | 1 k2 2% 0.25W |
| 3923 | 4822 111 90249 | 10k 2% 0.25W |
| 3924 | 4822116522226 | 5600 5% 0.5W |
| 3925 | 4822 1 1 6 52226 | 5600 5% 0.5W |
| 3926 | 5322 111 90111 | 4k7 2% 0.25W |
| 3930 | 48221 1 190197 | 220k 2% 0.25W |
| 3931 | 4822 111 90197 | 220k 2% 0.25W |
| 3932 | 48221 1 190197 | 220k 2% 0.25W |
| 3933 | 4822 111 90197 | 220k 2% 0.25W |
| 3934 | 4822 111 91522 | 2k2 5%0,1W |
| 3935 | 48221 1 191522 | 2k2 5% 0.1W |
| 3937 | 48221 1 652175 | 10005%0,5W |
| 3938 | 482211652175 | 1000 5% 0.5W |
| 3939 | 4822 11652201 | 750 5 0.5W |
| 3948 | 4822051 10008 | jumper |
| 3949 | 4822 051 10008 | jumper |
| 3952 | 4822051 10008 | jumper |
| 3953 | 4822051 10008 | jumper |
| 3954 | 4822051 10008 | jumper |
| 3955 | 4822051 10008 | jumper |
| 3957 | 4822 051 10008 | jumper |

| | | |
|---|---|---|
| 5900 | 482215752286 | 22uH 10% |

| | | |
|---|---|---|
| 6901 | 4822 130 80446 | LL4148 |
| 6904 | 4822 13080446 | LL4148 |

### -IC

| | | |
|---|---|---|
| 7900 | 5322 13041982 | BC848B |
| 7901 | 5322 13041982 | BC848B |
| 7902 | 5322 13041982 | BC848B |
| 7903 | 5322 13041982 | BC848B |
| 7904 | 5322209 10576 | HEF4053BP |
| 7905 | 5322209 10576 | HEF4053BP |
| 7920 | 5322 13041982 | BC848B |

## KODY USZKODZEN

A) Fault information on the screen FO offtime (mis). Blink LED indication 58 (oscilloscope).
Possible fault: Internal RAM fault.
Possible def. unit: IC7720.
B) Fault information on the screen F1, offtime (mis) Blink LED indication M7 (oscilloscope).
Possible fault: 14V operation voltage.
Possible def. units: IC7545, R3581, IC7540, R3580, IC7470 and D6580. C) C) **Fault** information on the screen F2 offtime
(mis). Blink LED indication 235 (oscilloscope)
Possible fault: Internal timer fault.
Possible def. unit: IC7720.
D) Fault information on the screen F3, offtime (mis) Blink LED indication 469 (oscilloscope)
Possible fault: Channel selector fault.
Possible def. units: U1000.
E) Fault information on the screen F4 offtime (mis). Blink LED indication 958 (oscilloscope)
Possible fault: EE prom faults.
Possible def. unit: IC7770.
F) Fault information on the screen F5, offtime (mis) Blink LED indication 827 (oscilloscope)
Possible fault: Stereo decoder.
Possible def. unit: IC7220.
The fault information only appears when the appliance functions.
G) Fault information on the screen F6 offtime (mis). Blink LED indication 606 (oscilloscope)
Possible fault: Audio servo amplifier.
Possible def. unit: IC7770.
H) Fault information on the **screen F7, offtime (mis) Blink LED indication 164 (oscilloscope)**
Possible fault: TXT decoder.
Possible def. unit: IC7800, IC7820.
The fault information only appears when the appliance functions. If the picture is missing the off-time of the display LEDs
can be checked using an oscilloscope to determine what fault has been produced.
The fault only occurs when the appliance functions. After turning off the mains switch the fault is no longer indicated but it is
still present.

## 1010 SVHS PANEL

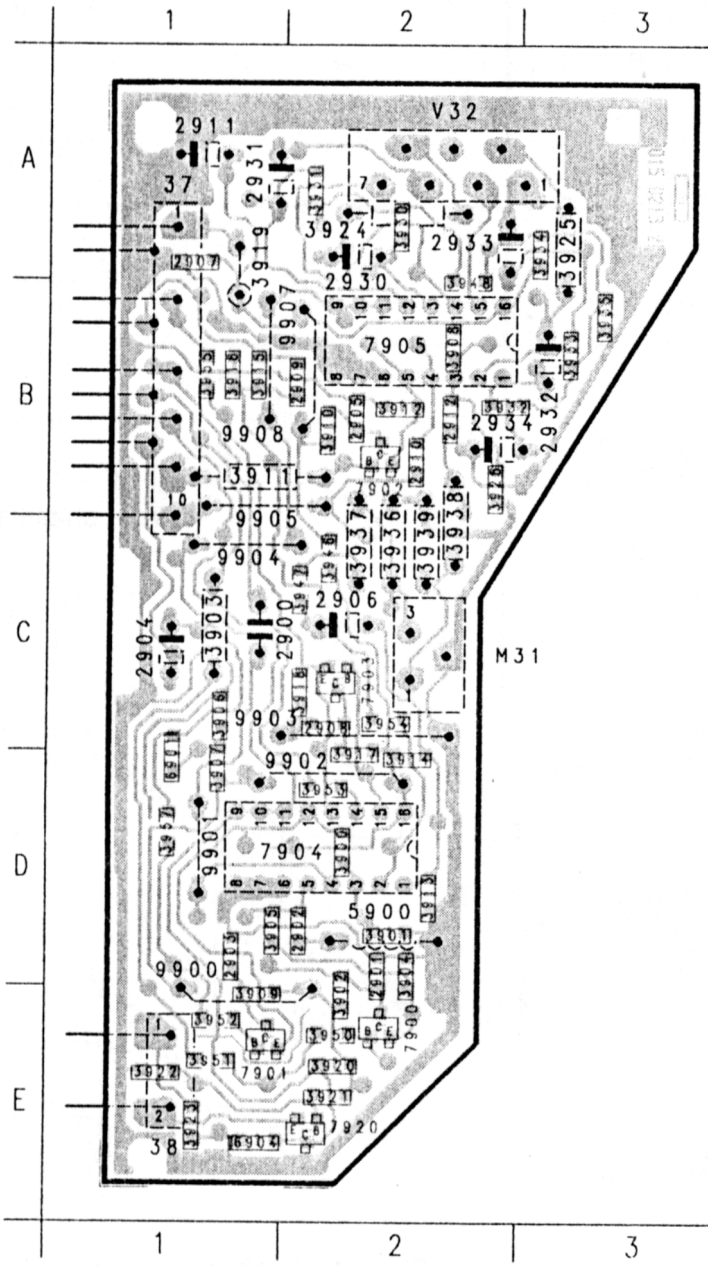


| | | | |
|---|---|---|---|
| 37 | 1A | 3931 | 2A |
| 38 | 1E | 3932 | 2B |
| M31 | 2C | 3933 | 3B |
| V32 | 2A | 3934 | 3A |
| 2900 | 2C | 3935 | 3B |
| 2901 | 2D | 3936 | 2C |
| 2902 | 2D | 3937 | 2C |
| 2903 | 1D | 3938 | 2C |
| 2904 | 1C | 3939 | 2C |
| 2905 | 2B | 3946 | 2C |
| 2906 | 2C | 3947 | 2C |
| 2907 | 1A | 3948 | 2A |
| 2908 | 2C | 3950 | 2E |
| 2909 | 2B | 3951 | 1E |
| 2910 | 2B | 3952 | 1E |
| 2911 | 1A | 3953 | 2D |
| 2912 | 2B | 3954 | 2C |
| 2930 | 2B | 3955 | 1B |
| 2931 | 1A | 3957 | 1D |
| 2932 | 3B | 5900 | 2D |
| 2933 | 2A | 6901 | 1D |
| 2934 | 2B | 6904 | 1E |
| 3900 | 2D | 7900 | 2E |
| 3901 | 2D | 7901 | 1E |
| 3902 | 2E | 7902 | 2B |
| 3903 | 1C | 7903 | 2C |
| 3904 | 2D | 7904 | 2D |
| 3905 | 1D | 7905 | 2B |
| 3906 | 1C | 7920 | 2E |
| 3907 | 1D | 9900 | 1D |
| 3908 | 2B | 9901 | 1D |
| 3909 | 1E | 9902 | 2D |
| 3910 | 2B | 9903 | 1C |
| 3911 | 1B | 9904 | 1C |
| 3912 | 2B | 9905 | 1C |
| 3913 | 2D | 9907 | 2B |
| 3914 | 2D | 9908 | 1B |
| 3915 | 1B | | |
| 3916 | 1B | | |
| 3917 | 2C | | |
| 3918 | 2C | | |
| 3919 | 1A | | |
| 3920 | 2E | | |
| 3921 | 2E | | |
| 3922 | 1E | | |
| 3923 | 1E | | |
| 3924 | 2A | | |
| 3925 | 3A | | |
| 3926 | 2B | | |
| 3930 | 2A | | |

9215 C 1
9216 D 1
9217 D 1
9218 B 1
9219 A 2

9220 D 1
9302 E 2
9303 F 2
9304 E 1
9307 E 2

9308 E 2
9309 D 2
9310 D 2
9311 D 2
9312 D 1

9313 D 2
9314 F 1
9315 E 1
9316 E 1
9317 F 1

9318 C 2
9319 E 3
9320 E 2
9321 F 2
9322 E 2

9323 E 1
9324 D 2
9325 D 1
9326 D 1
9327 D 1

9328 E 1
9401 C 3
9402 B 3
9403 B 2
9404 B 3

9405 B 3
9501 B 4
9502 A 4
9503 A 3
9504 A 3

9505 B 3
9507 C 3
9508 C 4
9509 C 3
9510 B 3

9511 B 3
9512 B 2
9513 B 2
9514 B 2
9515 B 2

9516 B 2
9518 A 2
9519 D 2
9601 D 4
9603 E 3

9604 D 2
9607 E 3
9608 E 3
9609 E 2
9610 D 3

9611 C 3
9612 E 2
9613 E 2
9614 D 2
9615 D 2

9616 C 2
9701 F 4
9702 F 3
9703 F 3
9704 F 3

9705 E 3
9706 E 3
9707 E 3
9708 E 3
9709 E 3

9710 E 3
9711 E 3
9713 E 3
9714 F 2
9719 F 2

9720 E 2
9721 E 2
9722 E 2
9723 E 2
9725 E 2

9726 E 2
9727 E 2
9728 E 3
9729 D 2
9730 D 2

9731 D 2
9733 F 2
9815 D 2
9816 D 2
9819 C 3

9820 C 2
9821 C 2
9822 A 2
9823 A 2
9901 A 2

9902 B 3
9903 B 2

## 1002 PICTURE TUBE PANEL

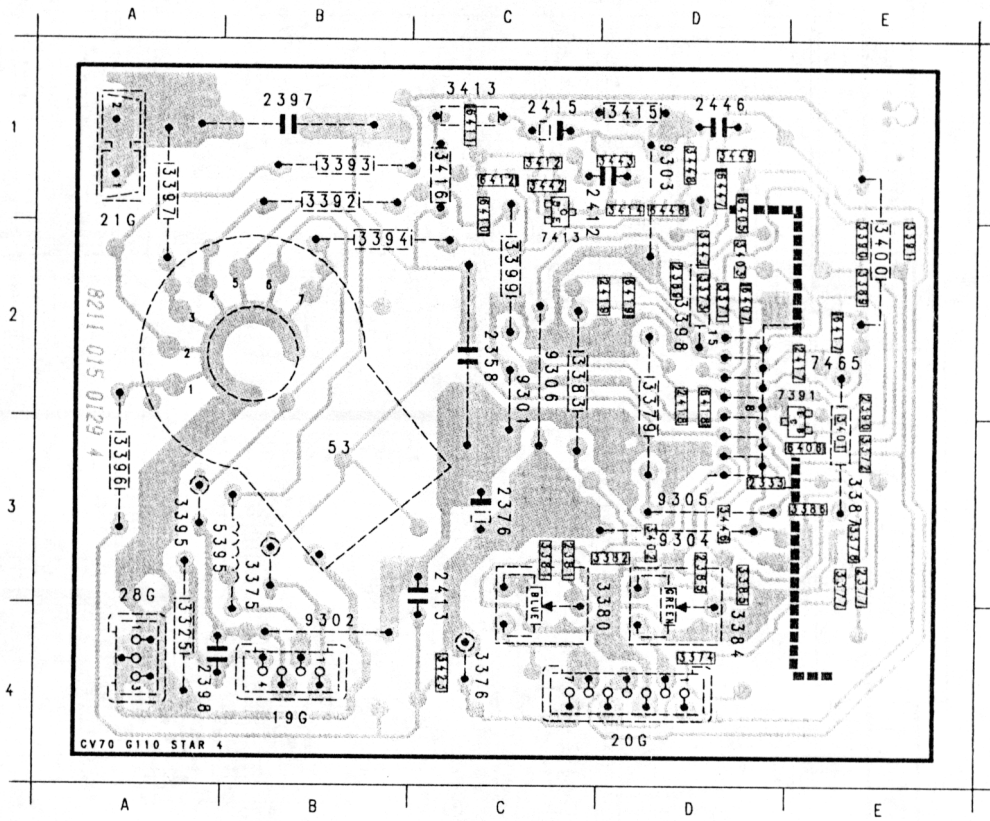


53 B 3
19G B 4
20G D 4
21G A 2
28G A 3

2333 D 3
2358 C 2
2376 C 3
2377 E 3
2381 C 3

2385 D 3
2389 D 2
2390 E 2
2397 B 1
2398 A 4

2412 C 1
2413 C 3
2415 C 1
2417 E 2
2418 D 2

2419 D 2
2446 D 1
3325 A 4
3371 D 2
3372 E 3

3373 D 2
3374 D 4
3375 B 3
3376 C 4
3377 E 3

3378 E 3
3379 D 2
3380 D 4
3381 C 3
3382 D 3

3383 C 2
3384 D 4
3385 D 3
3386 E 3
3387 E 3

3389 E 2
3390 E 2
3391 E 2
3392 B 1
3393 B 1

3394 B 2
3395 A 3
3396 A 3
3397 A 1
3398 D 2

3399 C 2
3400 E 2
3401 E 3
3402 D 3
3403 D 2

3412 C 1
3413 C 1
3414 D 1
3415 D 1
3416 C 1

3423 C 4
3442 C 1
3443 D 1
3446 D 3
3447 D 2

3448 D 1
3449 D 1
5395 A 3
6405 D 1
6406 E 3

6407 D 2
6410 C 1
6411 C 1
6412 C 1
6417 E 2

6418 D 2
6419 D 2
6447 D 1
6448 D 1
7391 E 2

7413 C 2
7465 E 2
9301 C 2
9302 B 4
9303 D 1

9304 D 3
9305 D 3
9306 C 2

6
CHASSIS G110 SVHS

## WIRING DIAGRAM

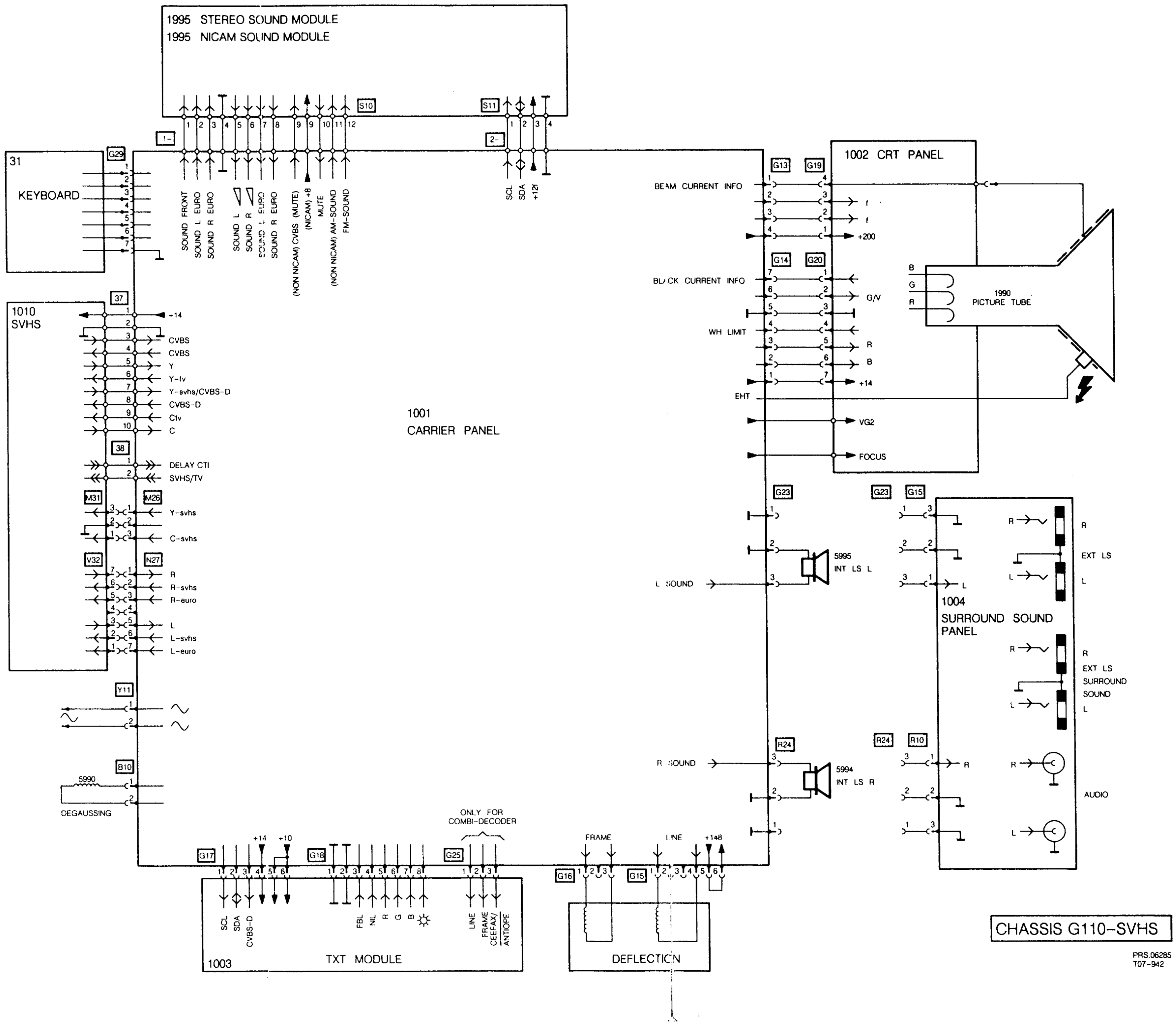

5
CHASSIS G110 SVHS

CARRIER PANEL

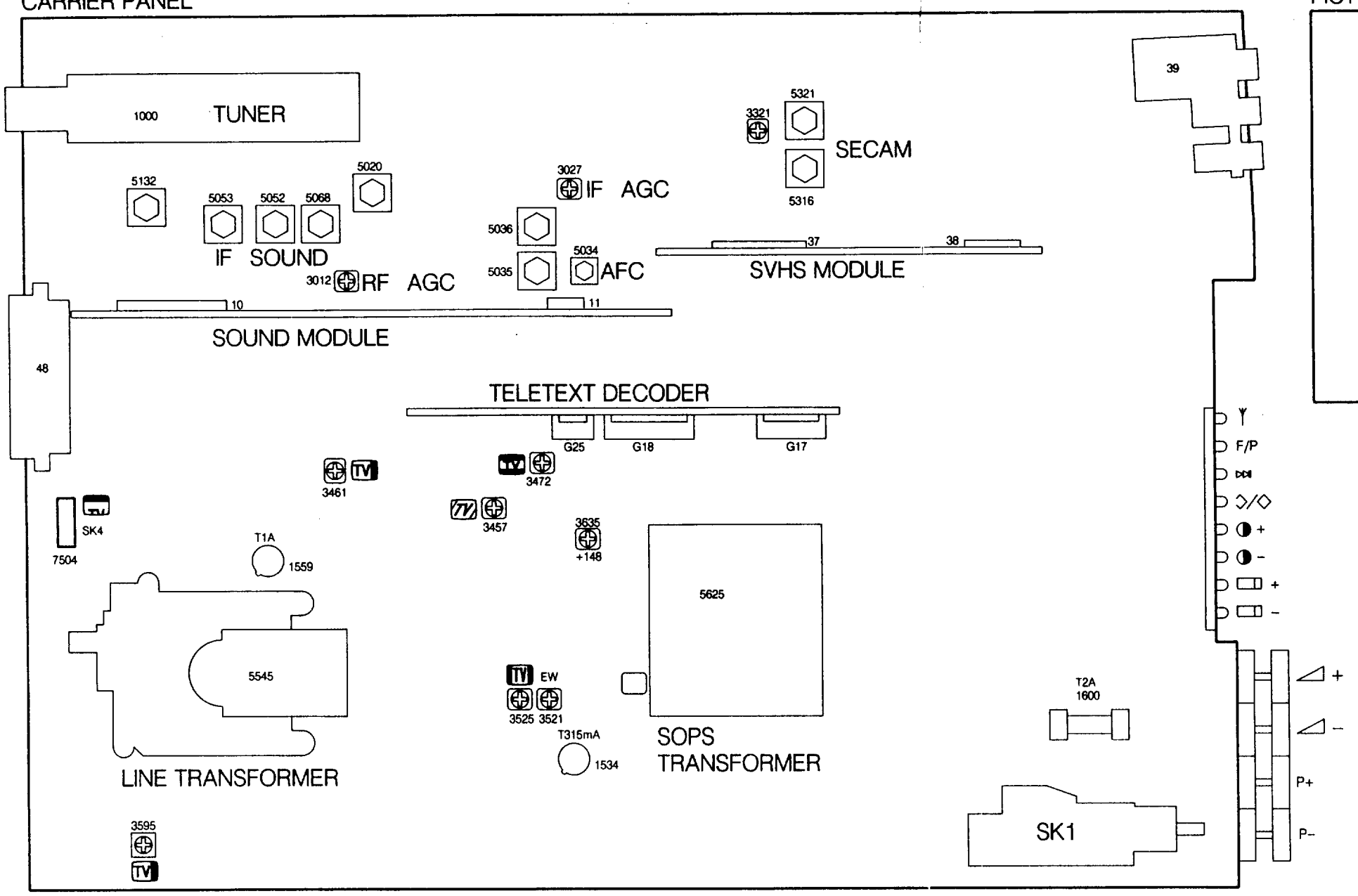


PICTURE TUBE PANEL

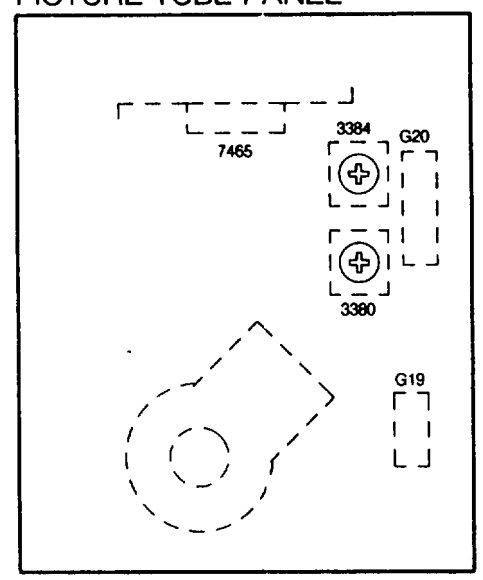


SURROUND SOUND PANEL

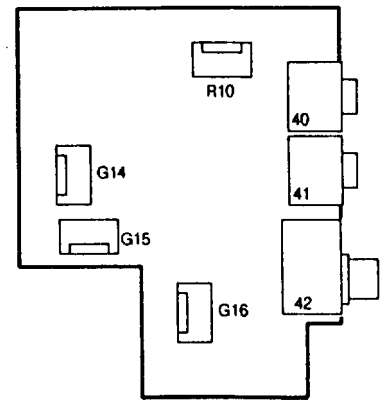


SVHS PANEL

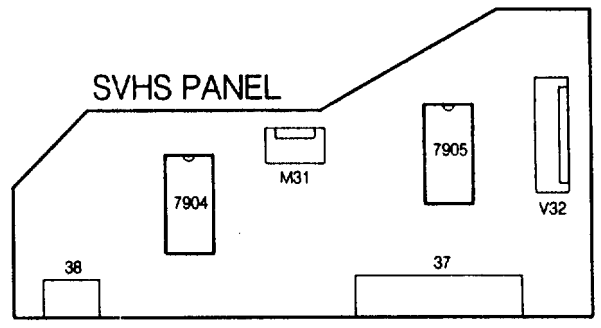


NICAM SOUND PANEL

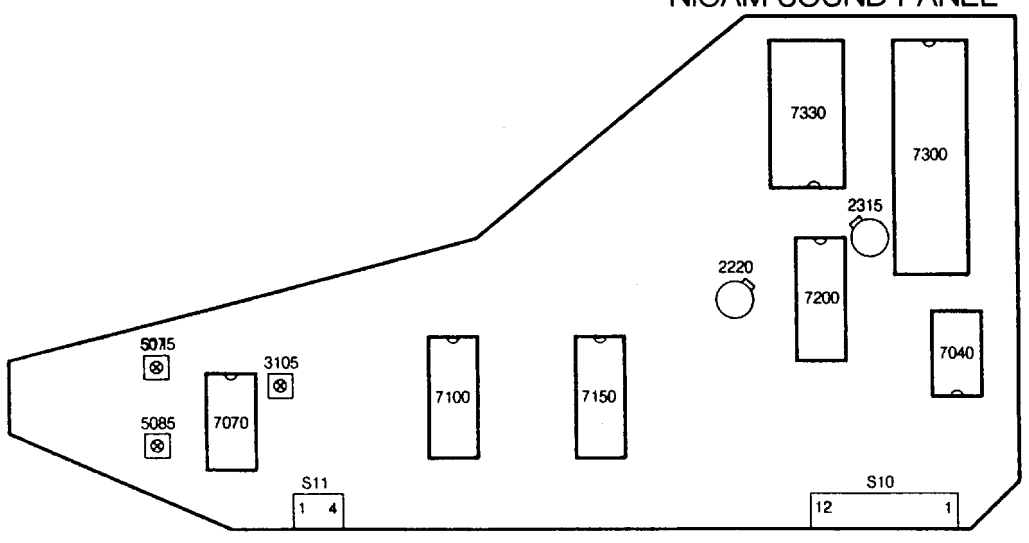


STEREO SOUND MODULE

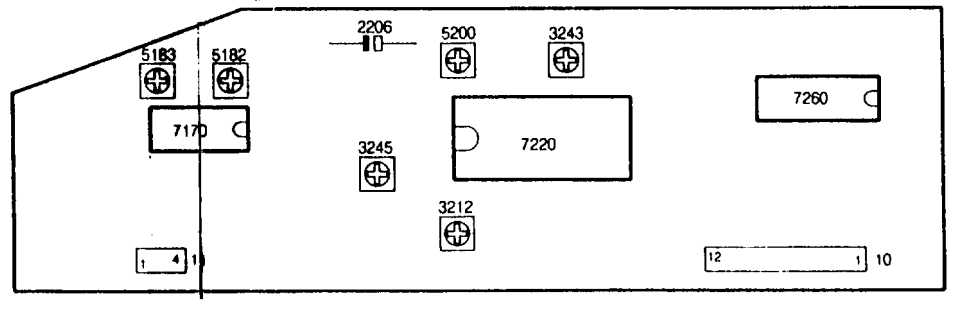


TELETEXT PANEL

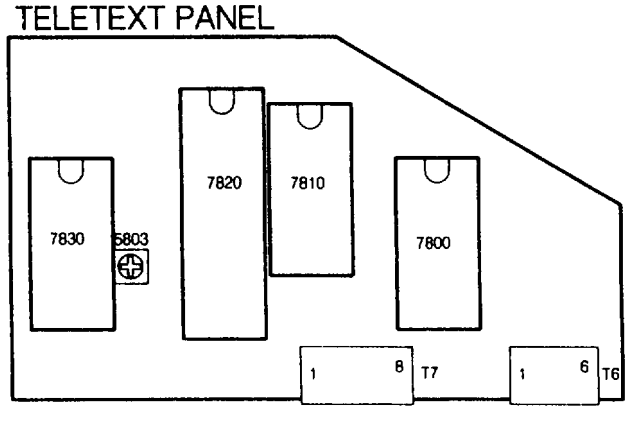


Fig. 11

MDA.02354
T27/943

# Service Information

1990-06-01

**CHASSIS G110-SVHS**

CT90-09

## Colour television

In the G 1 1 0 SVHS sets the blackline picture tube has been introduced Consequently, these sets have different carrier and picture tube boards.
In this service information you'll find the PCB layouts of these new boards, the differences in the circuit diagrams compared to the G 1 1 0 SVHS and a new parts list.

In de G 1 1 0 SVHS sets is de blackline beeldbuis geintroduceert. Hierdoor hebben deze sets een ander dragerpaneel en beeldbuispaneel.
In deze service informatie worden de print lay-outs van deze nieuwe panelen, de verschillen in de principe schema's ten opzichte van de G 1 1 0 SVHS en een nieuwe stuklijst gegeven.

Les chassis G110-SVHS avec tube-image Black Line ont ete lances. Us sont de ce fait dotes d'un panneau porteur et d'un panneau de tube-image differents.
Cette information de service fournit les configurations **de** circuits impnmes de ces nouveaux panneaux. les differences sur les schemas de principe en ce qui concerne le G 1 1 0 SVHS ainsi qu'une nouvelle nomenclature des pieces d'usure.

Bei den GIIO-SVHS-Geraten wurde die Blackline-Bildrdhre eingefuhrt. Daher sind diese Gerate mit einer anderen Trager- und Bildrbhrenplatine ausgestattet.
Diese Service-Information enthalt die Layouts der neuen Platinen. Blockschaltbilder zum Vergleich mit dem herkommlichen G 1 1 0 SVHS und eine neue Ersatzteilliste.

Nella gamma dei televisori G 1 1 0 SVHS e state introdotto il cinescopio blackline per cui questi apparecchi sono muniti di un altro pannello di alimentazione e del cinescopio.
Nelle presenti informazioni troverete i lay-out del circuito stampato di questi nuovi pannelli, le differenze negli schemi di principio nspetto ai G 1 1 0 SVHS ed un nuovo elenco dei particolari.

Se ha introducido en los aparatos G 1 1 0 SVHS el tubo de imagen de linea negra. Esto hace que los aparatos tengan un panel portador y un panel de tubo de imagen distinto.
La informacion de servicio contiene las configuraciones de estos nuevos paneles, las diferencias en los esquemas de principio con respecto a los G 1 1 0 SVHS y una nueva lista de pieza.

Service
Service
Service

**SCHNELLDIAGNOSE-UEBERSICHT (NON NICAM)**

| Fehlermeldung am Schirm | AUS-Zeit (ms) Blinkende LED-Anzeige | Beschreibung des Fehlers | Etwaiges schadhaftes Bauteil |
|---|---|---|---|
| F0 | 58 | Fehler des internen RAMs | IC7720 |
| F1 | 117 | 14V-Speisespannung | TS7545.R3581<br>TS7540.R3580<br>TS7470,D6580 |
| F2 | 235 | Internen Zeitgebers | IC7720 |
| F3 | 469 | Fehler des kanalwahlers | U1000 |
| F4 | 958 | EEPROM-Fehler | IC7770 |
| F5- | 827 | Stereo-Decoder | IC7220 |
| F6 | 606 | Tonregelverstarker | IC7260 |
| F7* | 164 | Videotextdecoder | IC7800<br>IC7820 |

**SCHNELLDIAGNOSE-UEBERSICHT (NICAM)**

| Fehlermeldung am Schirm | AUS-Zeit (ms) Blinkende LED-Anzeige | Beschreibung des Fehlers | Etwaiges schadhaftes Bauteil |
|---|---|---|---|
| F0 | 58 | HP-Fehler | IC7720 |
| P1 | 117 | 14V-Speisespannung | IC75545.3581<br>IC7540.R3580<br>TS7470.D6580 |
| F2 | 235 | E/A-Vervielfacher-Fehler | IC7040 |
| F3 | 469 | Kanalwahler (U1000) | U1000 |
| P4 | 958 | EEPROM-Fehler | IC7770 |
| F5 | 827 | Stereo-Decoder | IC7100 |
| F6 | 606 | Tonregelverstarker | IC7150 |
| F7* | 164 | Videotext-Decoder | IC7800<br>IC7820 |

**Anmerkung:**

Wenn es kein Bild gibt. kann mit Hilfe eines Oszlltoskops die AUS-Zeit der Anzeige-Leuchtdiode gemessen werden, um dann dennoch bestimmen zu konnen, welche Fehlermeldung erzeugt worden ist.

*) Diese Fehlermeldungen treten nur bei einem arbeitenden Gerat auf. Nach Ausschalten mit Hilfe des Netzschalters werden diese Fehlermeldungen nicht mehr gemacht werden, wahrend es nach wie vor den Fehler gibt.

8 CHASSIS G110 SVHS

8 CHASSIS G110 SVHS

# DIAGRAM SCHEMA-SCHALTBILD SCHEMA-DIAGRAMA B

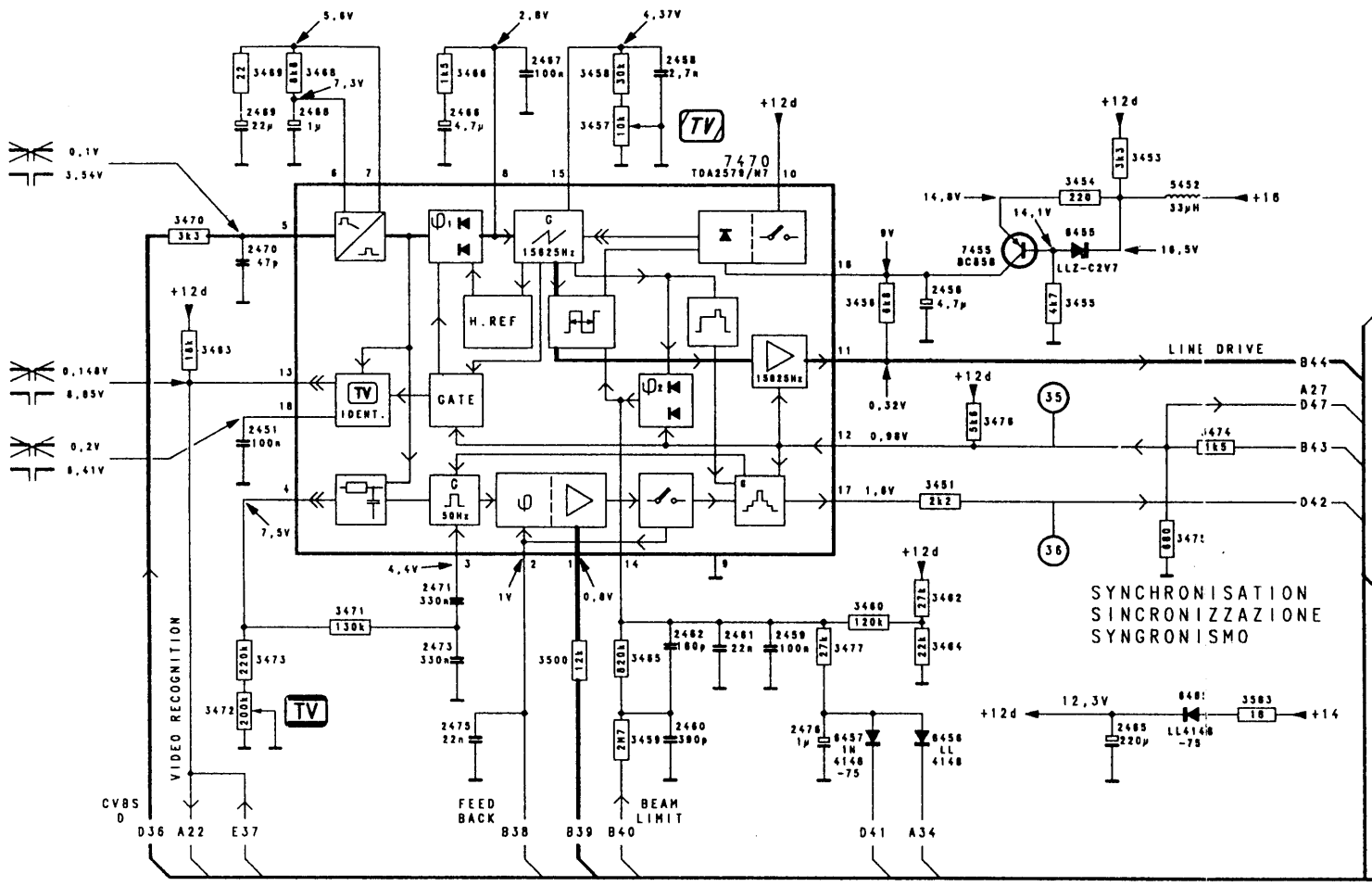


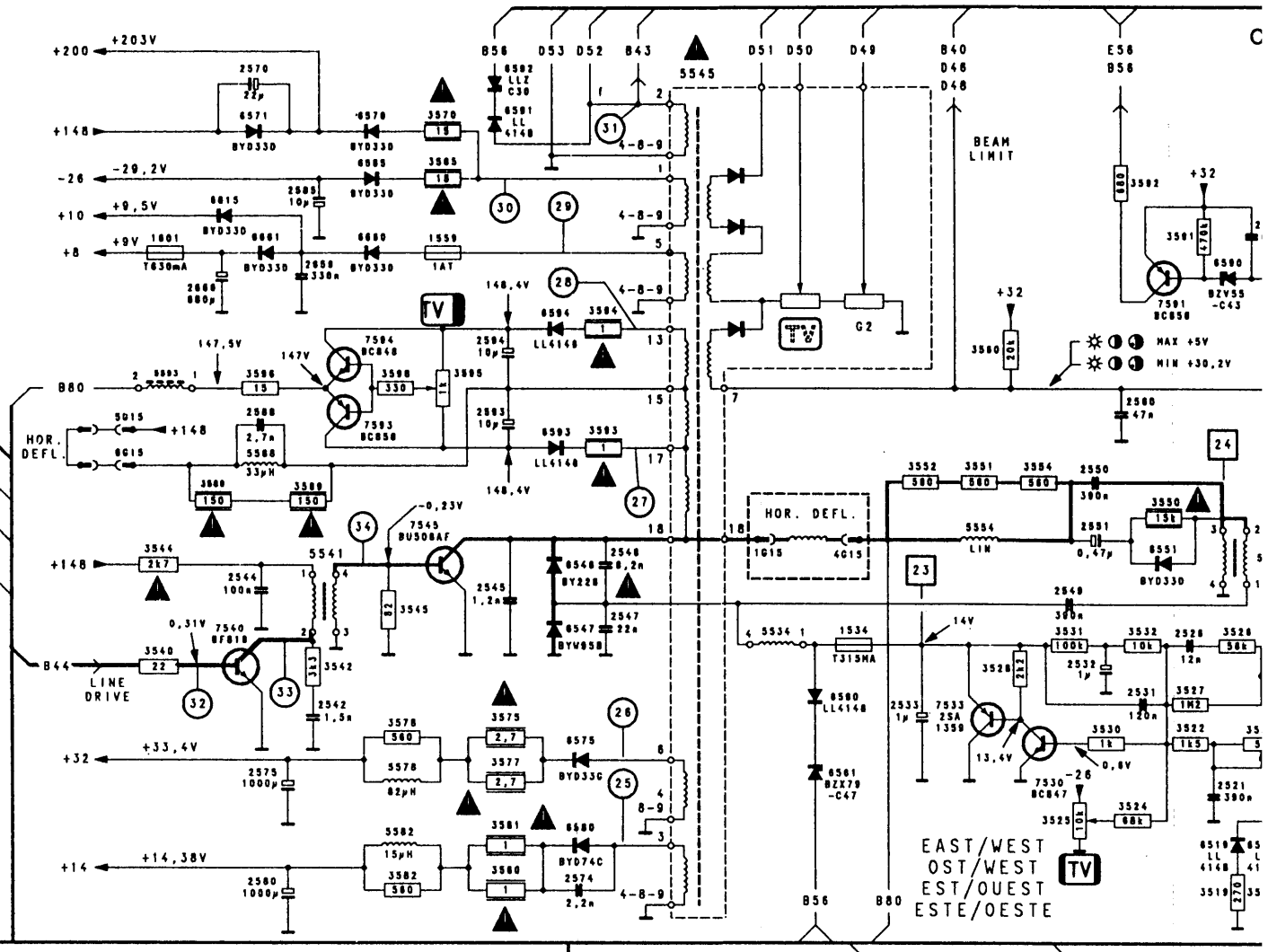


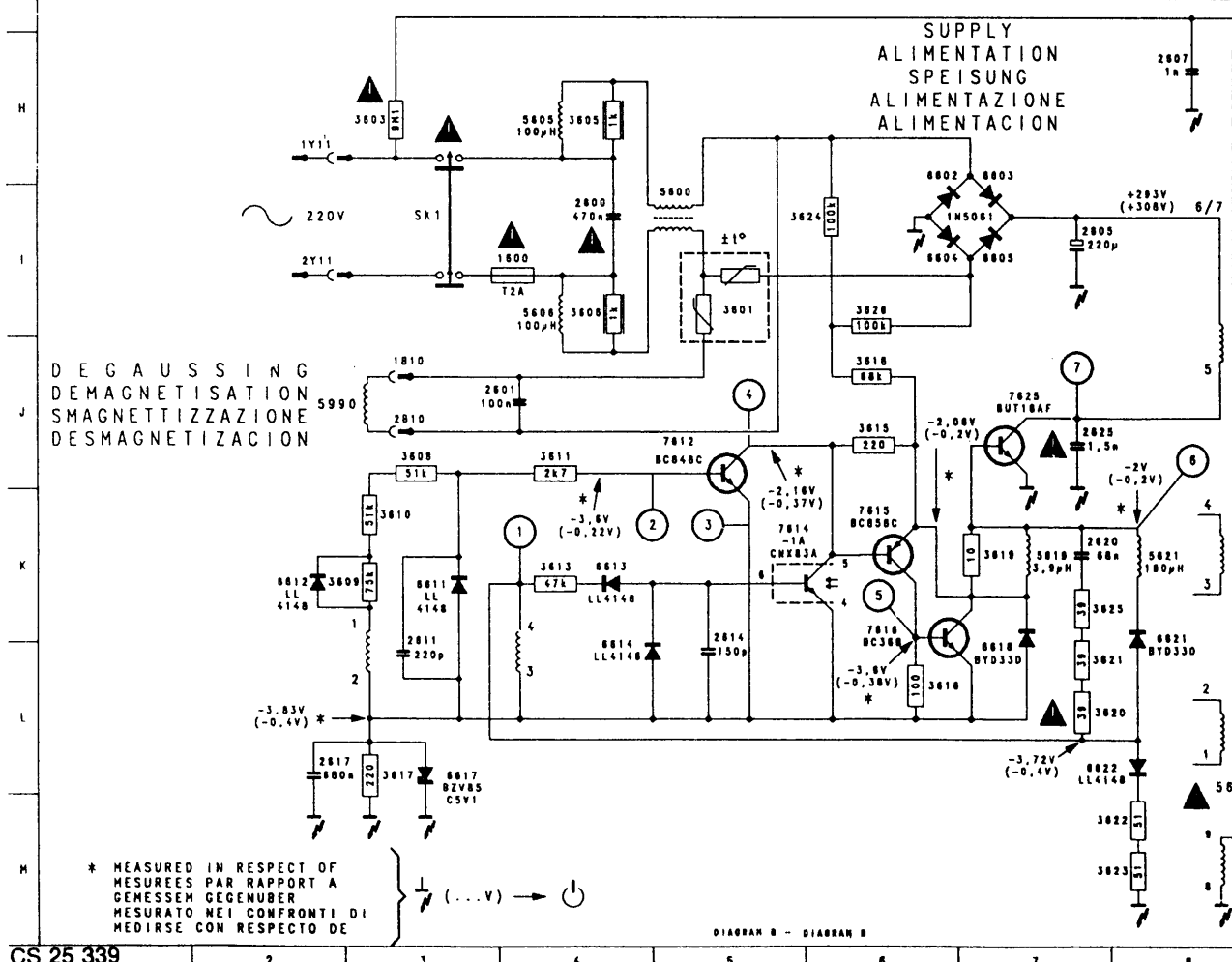


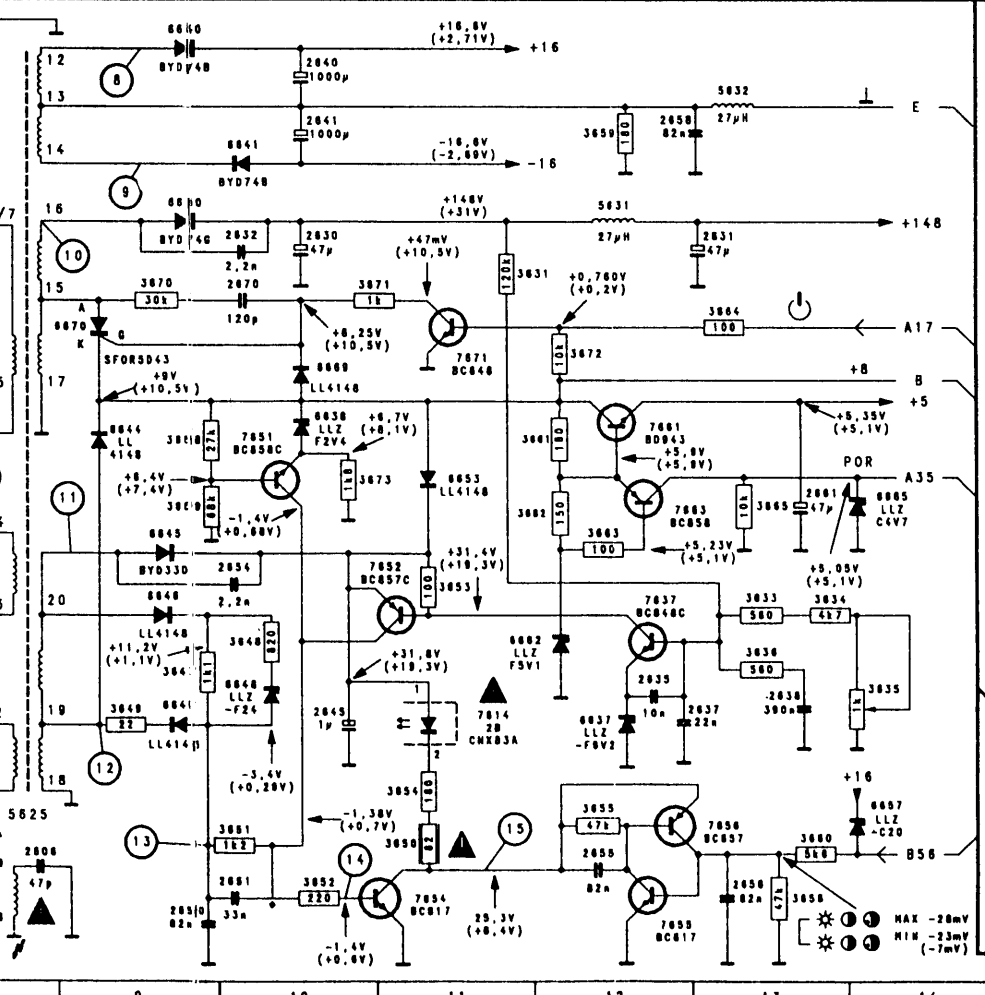


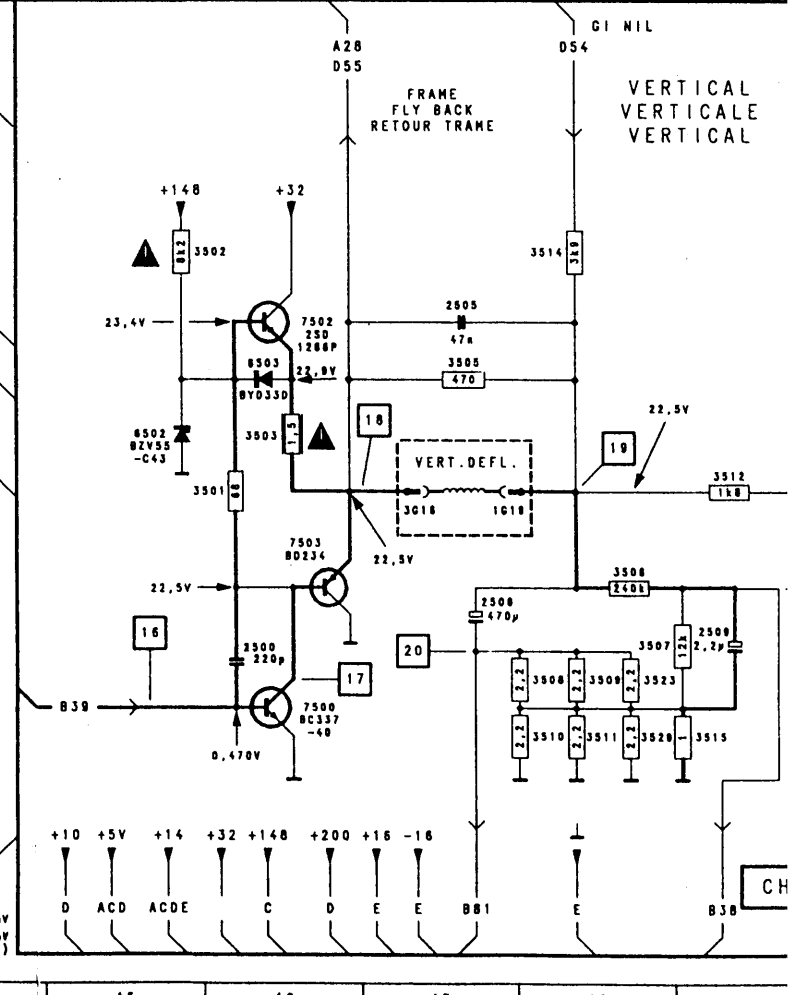

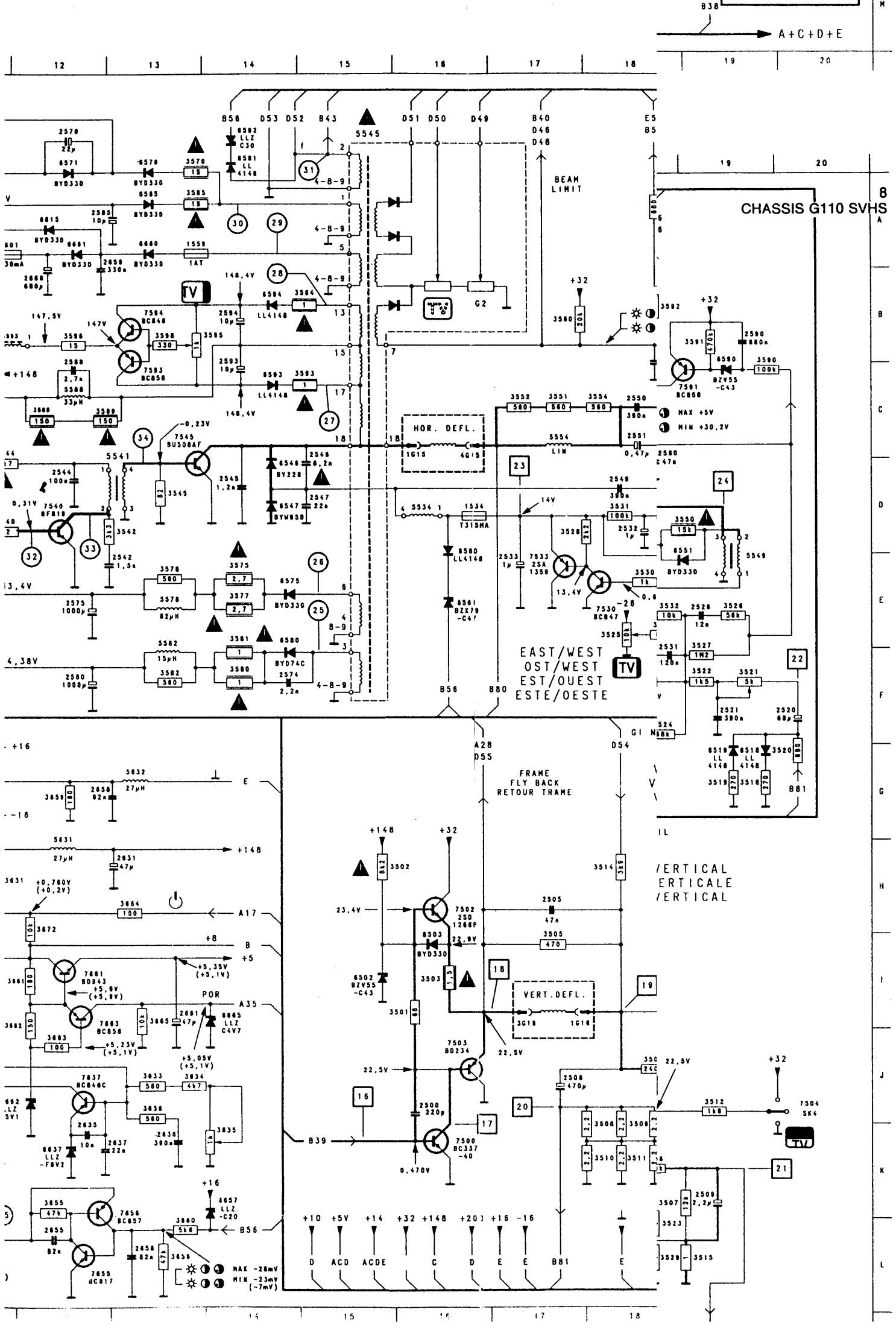


8
CHASSIS G110 SVHS

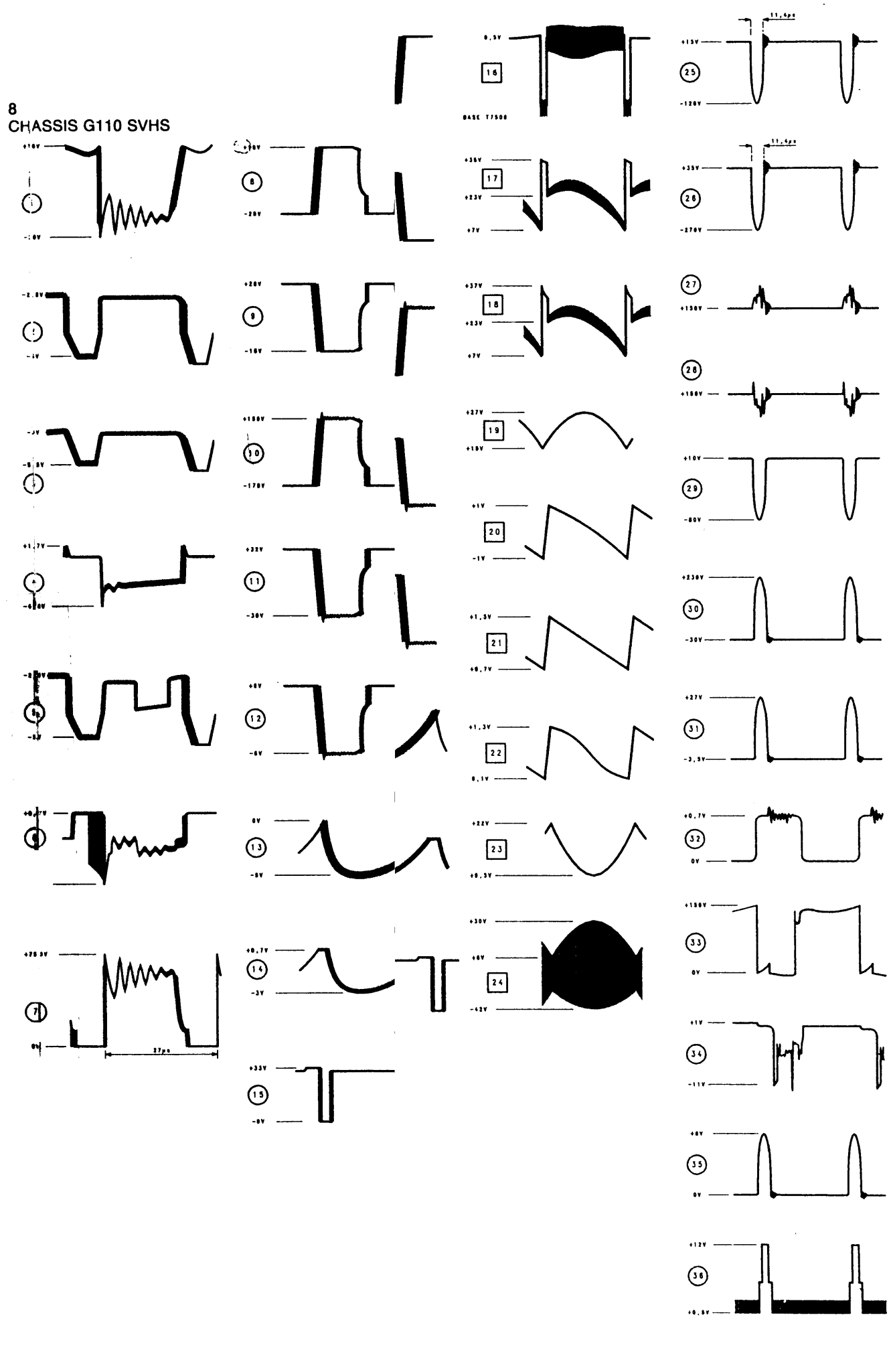

7 CHASSIS G110 SVHS

## SVHS BLOCK DIAGRAM

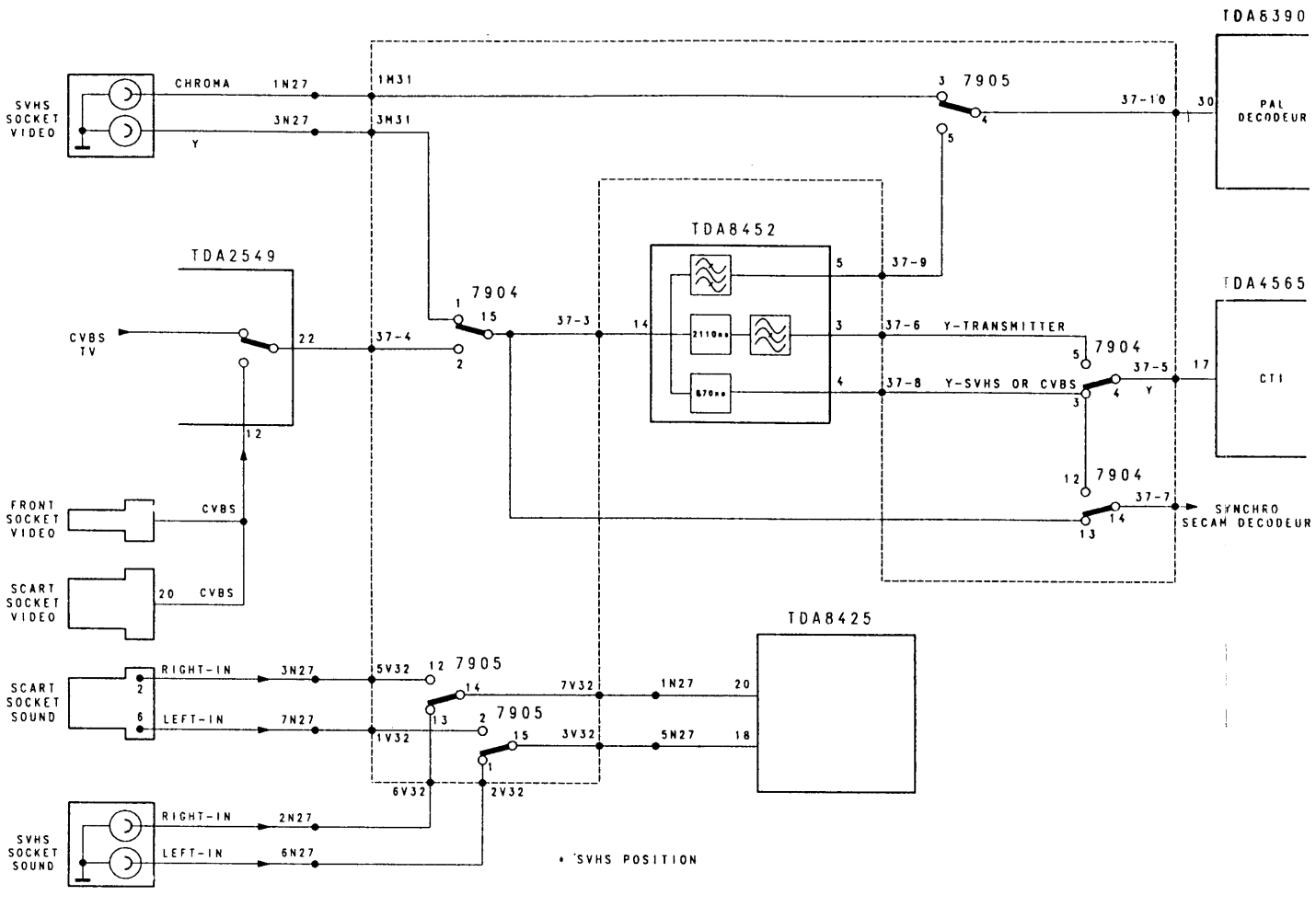


## SVHS CONTROL

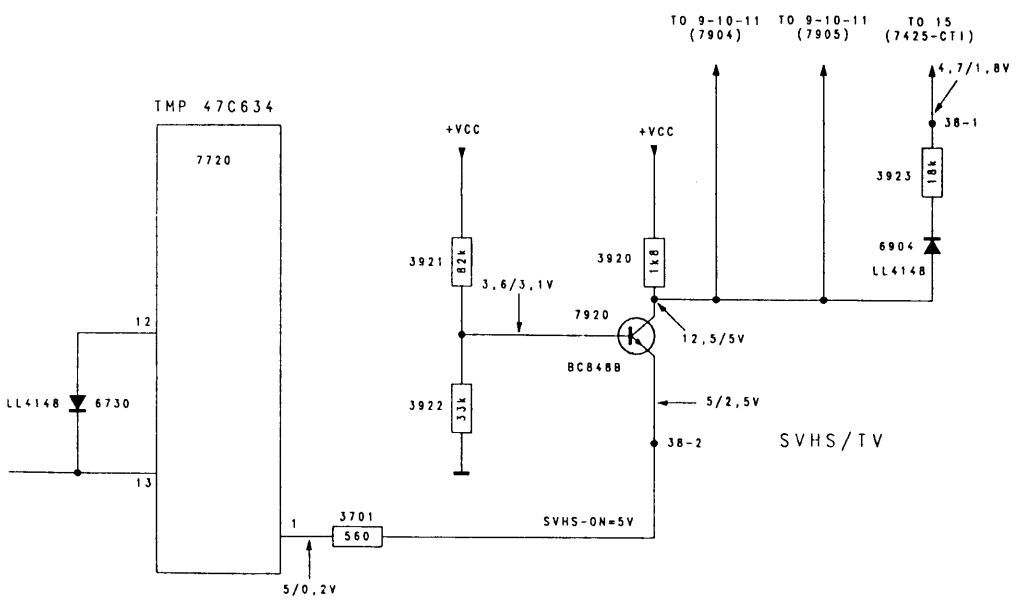


## DIAGRAM-SCHEMA-SCHALTBILD-SCHEMA-DIAGRAMA A

REMARKS-REMARQUES-ANMERKUNGEN-NOTE-NOTE

1) 6725 PRESENT IN NON REMOTE SETS
PRESENT SUR LES APPAREILS SANS C.A.D
ANWESEND IN GERATEN OHNE FERNBEDIENUNG
PRESENTE SUI MODELLI SENZA C.R
PRESENTE SOBRE MODELLOS SIN C.R

6726 PRESENT IN UHF ONLY SETS
PRESENT SUR LES APPAREILS
UNIQUEMENT UHF
ANWESEND IN GERATEN MIT NUR EINEM
UHF KANALWAHLER
PRESENTE SUI MODELLI SOLO UHF
PRESENTE SOBRE MODELLOS SOLAMENTE UHF

6727 PRESENT IN HYPERBAND SETS
PRESENT SUR LES APPAREILS AYANT
UN SELECTEUR HYPERBANDE
ANWESEND IN GERATEN MIT HYPERBAND
KANALWAHLER
PRESENTE SUI MODELLI CON SELETTORE
IPERBANDA
PRESENTE SOBRE MODELLOS CON SELECTOR
HIPERBANDA

6728 PRESENT IN MULTI FRENCH SETS
PRESENT SUR LES APPAREILS MULTI FRANCE
ANWESEND IN GERATEN MULTI FRANZOSISCH
PRESENTE SUI MODELLI MULTI FRANCIA
PRESENTE SOBRE MODELLOS MULTI FRANCIA

6729 PRESENT IN MULTI SETS
PRESENT SUR LES APPAREILS MULTI
ANWESEND IN GERATEN MULTI
PRESENTE SUI MODELLI MULTI
PRESENTE SOBRE MODELLOS MULTI

2) PRESENT IN MULTI FRENCH SETS
PRESENT SUR LES APPAREILS MULTI FRANCE
ANWESEND IN GERAETEN MULTI FRANZOSISCH
PRESENTE SUI MODELLI MULTI FRANCIA
PRESENTE SOBRE MODELLOS MULTI FRANCIA

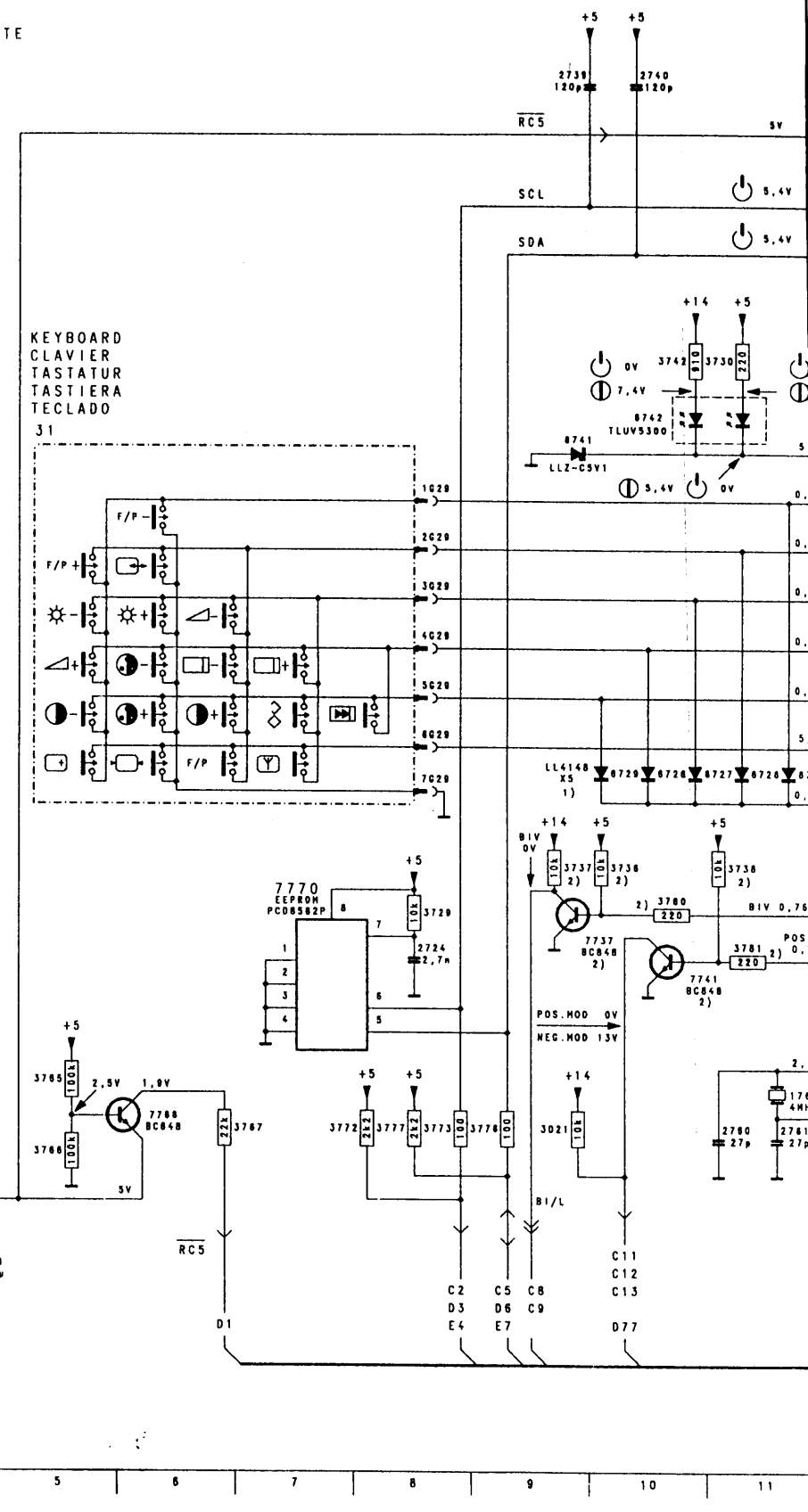


DIAGRAM A -DIAGRAM A

7 CHASSIS G110 SVHS

# HEMA-SCHALTBILD-SCHEMA-DIAGRAMA A

ES-ANMERKUNGEN-NOTE-NOTE

REMOTE SETS
S APPAREILS SANS C.A.D
RATEN OHNE FERNBEDIENUNG
ODELLI SENZA C.R
MODELLOS SIN C.R

ONLY SETS
S APPAREILS

RATEN MIT NUR EINEM
R
ODELLI SOLO UHF
MODELLOS SOLAMENTE UHF

ERBAND SETS
S APPAREILS AYANT
YPERBANDE
RATEN MIT HYPERBAND

ODELLI CON SELETTORE

MODELLOS CON SELECTOR

TI FRENCH SETS
S APPAREILS MULTI FRANCE
RATEN MULTI FRANZOSISCH
ODELLI MULTI FRANCIA
MODELLOS MULTI FRANCIA

TI SETS
S APPAREILS MULTI
RATEN MULTI
ODELLI MULTI
MODELLOS MULTI

TI FRENCH SETS
S APPAREILS MULTI FRANCE
RAETEN MULTI FRANZOSISCH
ODELLI MULTI FRANCIA
MODELLOS MULTI FRANCIA

KEYBOARD
CLAVIER
TASTATUR
TASTIERA
TECLADO
31

ECEIVER
PTEUR LR
MPFAENGER
VITORE RI
PTOR IR

CPU

B+C+D+E

CHASSIS G110


1G29 8E 7754 20F
1003 2K 7757 20F
1760 11J 7766 6K
1986 1K 7770 7I
2G29 8F

2702 19C
2702 16F
2705 16H
2709 16I
2714 16K

2724 8I
2739 9B
2740 10B
2750 19G
2757 20H

2758 19B
2758 15F
2759 20I
2760 11K
2761 11K

2766 4L
3G29 8F
3021 9K
3702 16K
3703 17K

3704 17K
3705 17J
3706 17K
3707 15H
3709 17I

3710 17J
3711 15I
3714 16J
3715 16K
3716 15I

3725 18B
3729 8I
3730 11D
3731 21K
3732 21I

3733 21H
3734 15G
3735 17G
3736 10H
3737 9H

3738 11H
3739 17G
3742 10D
3743 18H
3744 18H

3745 19H
3750 19G
3751 19J
3753 20K
3754 20G

3757 21G
3758 20J
3763 16C
3764 16C
3765 5J

3766 5K
3767 7K
3768 20E
3769 20E
3770 16C

3772 7K
3773 8K
3776 9K
3777 8K
3778 16J

3779 20B
3780 10I
3781 11I
4G29 8F
5G29 8G

5701 16F
6G29 8G
6721 17F
6722 17F
6723 16F

6725 11H
6726 11H
6727 11H
6728 10H
6729 10H

6741 9E
6742 10E
6743 18J
6745 19J
7G29 8H

7720 12B
7733 20H
7737 10I
7741 10I
7750 19I

## INDEX BELONGING TO DIAGRAM B

| | | | | | | | |
|---|---|---|---|---|---|---|---|
| 1B10 | 3J | 3463 | 3D | 3635 | 14L | 6661 | 12B |
| 1G15 | 16E | 3464 | 7F | 3636 | 13K | 6662 | 11K |
| 1G16 | 17K | 3465 | 5F | 3647 | 9L | 6665 | 14J |
| 1Y11 | 2H | 3466 | 4B | 3648 | 10K | 6669 | 10J |
| 1534 | 16E | 3468 | 3B | 3649 | 9L | 6670 | 9I |
| 1559 | 13B | 3469 | 3B | 3650 | 11M | 6815 | 12B |
| 1600 | 4I | 3470 | 2C | 3651 | 10M | 7455 | 8C |
| 1601 | 11B | 3471 | 3E | 3652 | 10M | 7470 | 6B |
| 2B10 | 3J | 3472 | 3F | 3653 | 11K | 7500 | 16L |
| 2Y11 | 2I | 3473 | 3F | 3654 | 11L | 7502 | 16I |
| 2451 | 3D | 3474 | 9D | 3655 | 12L | 7504 | 20J |
| 2456 | 8C | 3475 | 9E | 3656 | 13M | 7530 | 18F |
| 2458 | 6B | 3476 | 8D | 3659 | 12H | 7533 | 17F |
| 2459 | 6F | 3477 | 7F | 3660 | 13M | 7540 | 12E |
| 2460 | 6F | 3500 | 5F | 3661 | 12J | 7545 | 13D |
| 2461 | 6F | 3501 | 16J | 3662 | 11K | 7591 | 19C |
| 2462 | 6F | 3502 | 16I | 3663 | 12K | 7593 | 13D |
| 2465 | 9F | 3503 | 16J | 3664 | 13I | 7594 | 13C |
| 2466 | 4B | 3505 | 17J | 3665 | 13J | 7614 | 11L |
| 2467 | 5B | 3506 | 18K | 3668 | 9J | 7614 | 5K |
| 2468 | 3B | 3507 | 18K | 3669 | 9J | 7615 | 6K |
| 2469 | 3B | 3508 | 18L | 3670 | 9I | 7616 | 6K |
| 2470 | 3C | 3509 | 18L | 3671 | 10I | 7625 | 7J |
| 2471 | 4E | 3510 | 18L | 3672 | 12J | 7637 | 12K |
| 2473 | 4F | 3511 | 18L | 3673 | 10J | 7651 | 10J |
| 2475 | 4F | 3512 | 19J | 4G15 | 16E | 7652 | 11K |
| 2476 | 7F | 3514 | 18I | 5G15 | 11D | 7654 | 11M |
| 2500 | 16K | 3515 | 19L | 5452 | 9C | 7655 | 12M |
| 2505 | 17I | 3518 | 19G | 5534 | 16E | 7656 | 13M |
| 2506 | 17K | 3519 | 19G | 5541 | 13D | 7661 | 12J |
| 2509 | 19K | 3520 | 20G | 5545 | 15A | 7663 | 12K |
| 2520 | 20F | 3521 | 19F | 5549 | 19E | 7671 | 11J |
| 2521 | 19F | 3522 | 19F | 5554 | 17D | | |
| 2526 | 19E | 3523 | 18L | 5578 | 13F | | |
| 2531 | 18E | 3524 | 18F | 5582 | 13F | | |
| 2532 | 18E | 3525 | 18F | 5588 | 12D | | |
| 2533 | 17F | 3526 | 19E | 5593 | 11C | | |
| 2542 | 13F | 3527 | 19E | 5600 | 5I | | |
| 2544 | 12E | 3528 | 17E | 5605 | 4H | | |
| 2545 | 14E | 3529 | 18L | 5606 | 4I | | |
| 2546 | 15E | 3530 | 18F | 5619 | 7K | | |
| 2547 | 15E | 3531 | 18E | 5621 | 8K | | |
| 2549 | 18E | 3532 | 18E | 5625 | 8L | | |
| 2550 | 18D | 3540 | 11E | 5631 | 12I | | |
| 2551 | 18D | 3542 | 13E | 5632 | 13H | | |
| 2560 | 18C | 3544 | 11D | 5990 | 2J | | |
| 2570 | 12A | 3545 | 13E | 6G15 | 11D | | |
| 2574 | 14G | 3550 | 19D | 6455 | 8C | | |
| 2575 | 12F | 3551 | 17D | 6456 | 8F | | |
| 2580 | 12G | 3552 | 17D | 6457 | 7F | | |
| 2585 | 13B | 3554 | 18D | 6465 | 9F | | |
| 2588 | 12D | 3560 | 17C | 6502 | 15J | | |
| 2590 | 19B | 3570 | 13A | 6503 | 16J | | |
| 2593 | 14D | 3575 | 14F | 6518 | 19G | | |
| 2594 | 14C | 3577 | 14F | 6519 | 19G | | |
| 2600 | 4I | 3578 | 13F | 6546 | 14E | | |
| 2601 | 4J | 3580 | 14G | 6547 | 14E | | |
| 2605 | 7I | 3581 | 14F | 6551 | 19D | | |
| 2606 | 8M | 3582 | 13G | 6560 | 16F | | |
| 2607 | 8H | 3583 | 10F | 6561 | 16F | | |
| 2611 | 3K | 3585 | 13B | 6570 | 13A | | |
| 2614 | 5K | 3588 | 12D | 6571 | 12A | | |
| 2617 | 2L | 3589 | 12D | 6575 | 14F | | |
| 2620 | 7K | 3590 | 19B | 6580 | 14F | | |
| 2625 | 7J | 3591 | 19B | 6585 | 13B | | |
| 2630 | 10I | 3592 | 18B | 6590 | 19B | | |
| 2631 | 13I | 3593 | 15D | 6591 | 14A | | |
| 2632 | 10I | 3594 | 15C | 6592 | 14A | | |
| 2635 | 12L | 3595 | 14C | 6593 | 14D | | |
| 2636 | 13L | 3596 | 12C | 6594 | 14C | | |
| 2637 | 13L | 3598 | 13C | 6602 | 6H | | |
| 2640 | 10H | 3601 | 5I | 6603 | 7H | | |
| 2641 | 10H | 3603 | 3H | 6604 | 6I | | |
| 2645 | 10L | 3605 | 4H | 6605 | 7I | | |
| 2650 | 9M | 3606 | 4I | 6611 | 3K | | |
| 2651 | 10M | 3608 | 3J | 6612 | 2K | | |
| 2654 | 10K | 3609 | 2K | 6613 | 4K | | |
| 2655 | 12M | 3610 | 3K | 6614 | 4L | | |
| 2656 | 13M | 3611 | 4J | 6617 | 3L | | |
| 2658 | 12H | 3613 | 4K | 6618 | 7L | | |
| 2659 | 12B | 3615 | 6J | 6621 | 8K | | |
| 2660 | 12B | 3616 | 6L | 6622 | 7L | | |
| 2661 | 13J | 3617 | 3L | 6630 | 9I | | |
| 2670 | 10I | 3618 | 6J | 6637 | 12L | | |
| 3G16 | 17K | 3619 | 7K | 6638 | 10J | | |
| 3451 | 8E | 3620 | 7L | 6640 | 9G | | |
| 3453 | 9B | 3621 | 7L | 6641 | 10H | | |
| 3454 | 8B | 3622 | 8M | 6644 | 9J | | |
| 3455 | 8C | 3623 | 8M | 6645 | 9K | | |
| 3456 | 7C | 3624 | 6I | 6646 | 9K | | |
| 3457 | 5B | 3625 | 7K | 6648 | 10L | | |
| 3458 | 5B | 3626 | 6I | 6649 | 9L | | |
| 3459 | 5F | 3631 | 12I | 6653 | 11J | | |
| 3460 | 7E | 3633 | 13K | 6657 | 14L | | |
| 3462 | 7E | 3634 | 13K | 6660 | 13B | | |

9 CHASSIS G110 SVHS

DIAGRAM-SCHEMA-SCHALTBILD-SCHEMA-DIAGRAMA C1 : (FRANCE)

IF AMPLI + DET + A.G.C + A.F.C

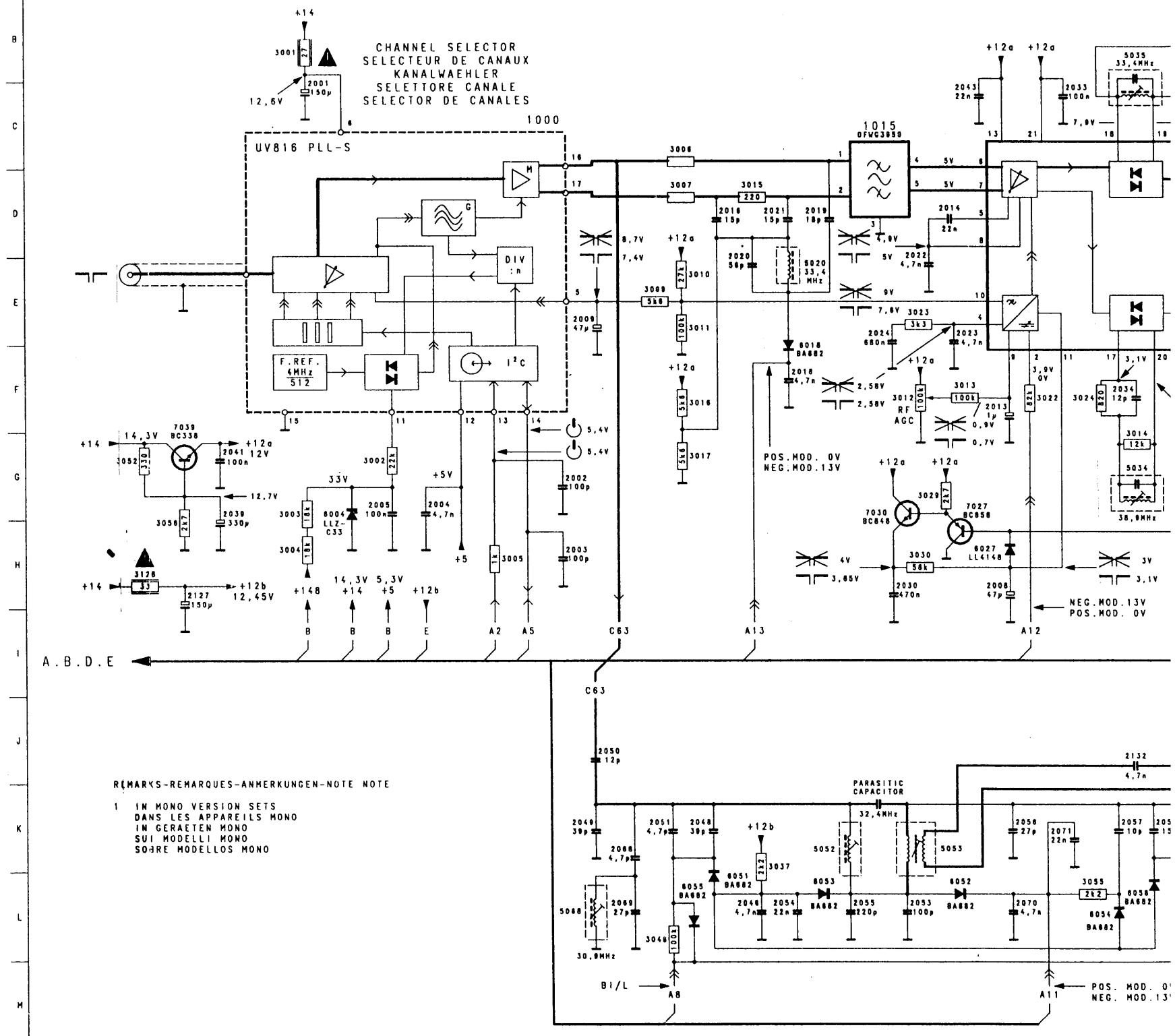

DIAGRAM-SCHEMA-SCHALTBILD-SCHEMA-DIAGRAMA C1 : (FRANCE)

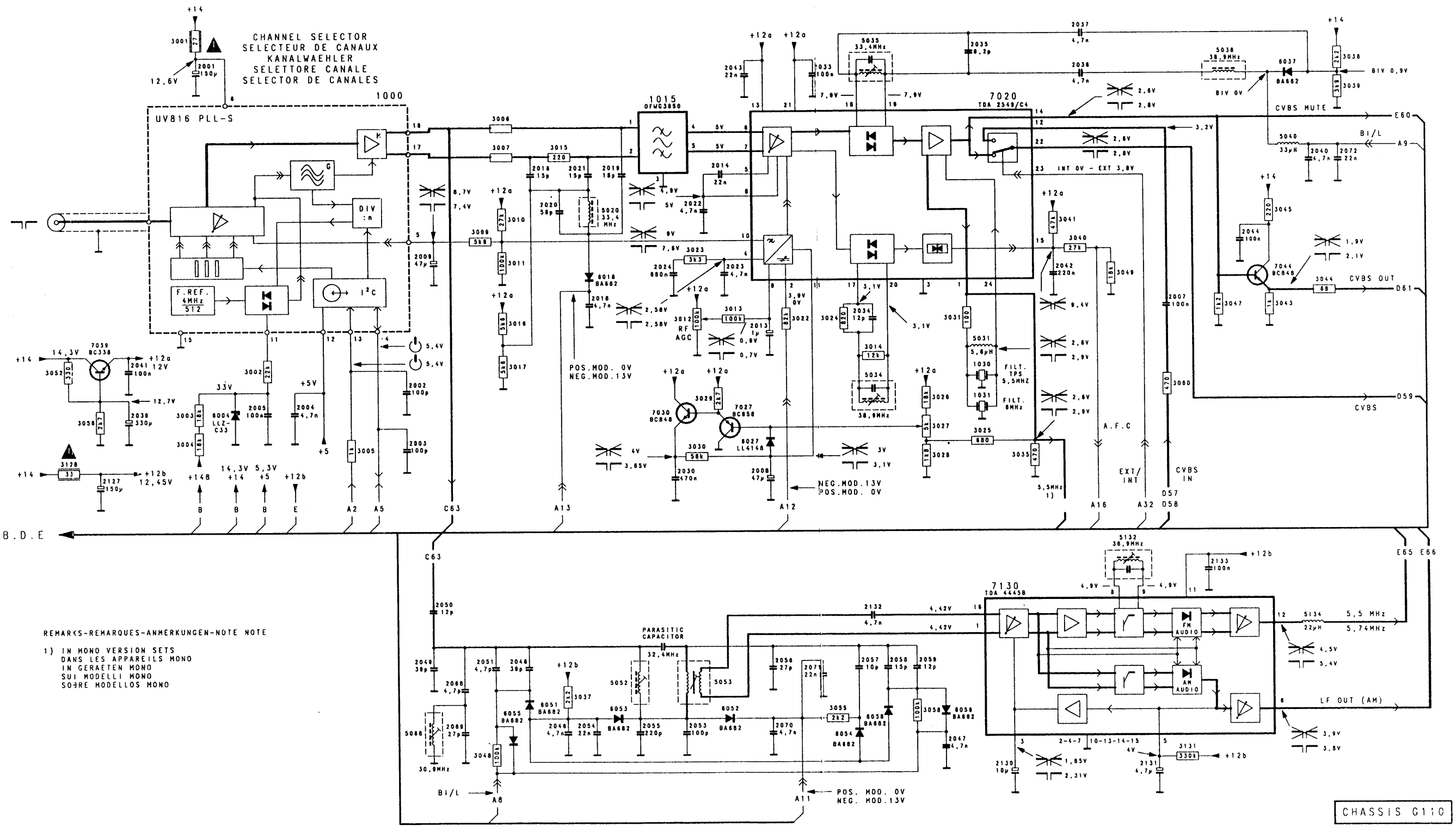


REMARKS-REMARQUES-ANMERKUNGEN-NOTE NOTE

1) IN MONO VERSION SETS
DANS LES APPAREILS MONO
IN GERAETEN MONO
SUI MODELLI MONO
SOBRE MODELLOS MONO

DIAGRAM C1 DIAGRAM C1

A.B.D.E


| | | | | | |
|---|---|---|---|---|---|
| | 1000 | 6C | 3052 | 2G | |
| | 1015 | 10C | 3055 | 13L | |
| | 1030 | 15G | 3056 | 2H | |
| | 1031 | 15G | 3058 | 14L | |
| A | 2001 | 4C | 3060 | 18G | |
| | 2002 | 7G | 3128 | 2H | |
| | 2003 | 7H | 3131 | 18L | |
| | 2004 | 5G | 5020 | 10E | |
| | 2005 | 5G | 5031 | 15F | |
| | 2007 | 17F | 5034 | 13G | |
| B | 2008 | 12H | 5035 | 13B | |
| | 2009 | 7E | 5036 | 18B | |
| | 2013 | 12F | 5040 | 19D | |
| | 2014 | 11D | 5052 | 10K | |
| | 2016 | 9D | 5053 | 11K | |
| | 2018 | 9F | 5068 | 7L | |
| | 2019 | 10D | 5132 | 17I | |
| C | 2020 | 9D | 5134 | 19J | |
| | 2021 | 9D | 6004 | 4G | |
| | 2022 | 11D | 6018 | 9F | |
| | 2023 | 11E | 6027 | 11H | |
| | 2024 | 10E | 6037 | 19C | |
| | 2030 | 11H | 6051 | 9L | |
| | 2033 | 13C | 6052 | 11L | |
| D | 2034 | 13F | 6053 | 10L | |
| | 2035 | 15B | 6055 | 8L | |
| | 2036 | 16C | 6056 | 14L | |
| | 2037 | 16B | 6058 | 13L | |
| | 2039 | 3G | 7020 | 15C | |
| | 2040 | 20D | 7027 | 11G | |
| E | 2041 | 3G | 7030 | 10G | |
| | 2042 | 16E | 7039 | 2F | |
| | 2043 | 11C | 7044 | 19E | |
| | 2044 | 19E | 7130 | 15J | |
| | 2046 | 9L | | | |
| | 2047 | 14L | | | |
| F | 2048 | 8K | | | |
| | 2049 | 7K | | | |
| | 2050 | 7J | | | |
| | 2051 | 8K | | | |
| | 2053 | 11L | | | |
| | 2054 | 9L | | | |
| | 2055 | 10L | | | |
| G | 2056 | 12K | | | |
| | 2057 | 13K | | | |
| | 2058 | 14K | | | |
| | 2059 | 14K | | | |
| | 2068 | 7K | | | |
| | 2069 | 7L | | | |
| | 2070 | 12L | | | |
| H | 2071 | 12K | | | |
| | 2072 | 20D | | | |
| | 2127 | 2H | | | |
| | 2130 | 15L | | | |
| | 2131 | 17L | | | |
| | 2132 | 13J | | | |
| I | 2133 | 18J | | | |
| | 3001 | 3B | | | |
| | 3002 | 4G | | | |
| | 3003 | 4G | | | |
| | 3004 | 4H | | | |
| | 3005 | 6H | | | |
| | 3006 | 8C | | | |
| J | 3007 | 8D | | | |
| | 3009 | 8E | | | |
| | 3010 | 8E | | | |
| | 3011 | 8E | | | |
| | 3012 | 11F | | | |
| | 3013 | 11F | | | |
| | 3014 | 13G | | | |
| K | 3015 | 9D | | | |
| | 3016 | 8F | | | |
| | 3017 | 8G | | | |
| | 3022 | 12F | | | |
| | 3023 | 11E | | | |
| | 3024 | 13F | | | |
| L | 3025 | 15H | | | |
| | 3026 | 14G | | | |
| | 3027 | 14H | | | |
| | 3028 | 14H | | | |
| | 3029 | 11G | | | |
| | 3030 | 11H | | | |
| M | 3031 | 14F | | | |
| | 3035 | 15H | | | |
| | 3037 | 9K | | | |
| | 3038 | 20B | | | |
| | 3039 | 20C | | | |
| | 3040 | 16E | | | |
| | 3041 | 16E | | | |
| | 3043 | 19F | | | |
| | 3044 | 20F | | | |
| | 3045 | 19E | | | |
| | 3047 | 18F | | | |
| | 3048 | 8L | | | |
| | 3049 | 17E | | | |

10
CHASSIS G110 SVHS

10
CHASSIS G110 SVHS

# DIAGRAM-SCHEMA-SCHALTBILD-SCHEMA-DIAGRAMA C2 : ( PAL BG )

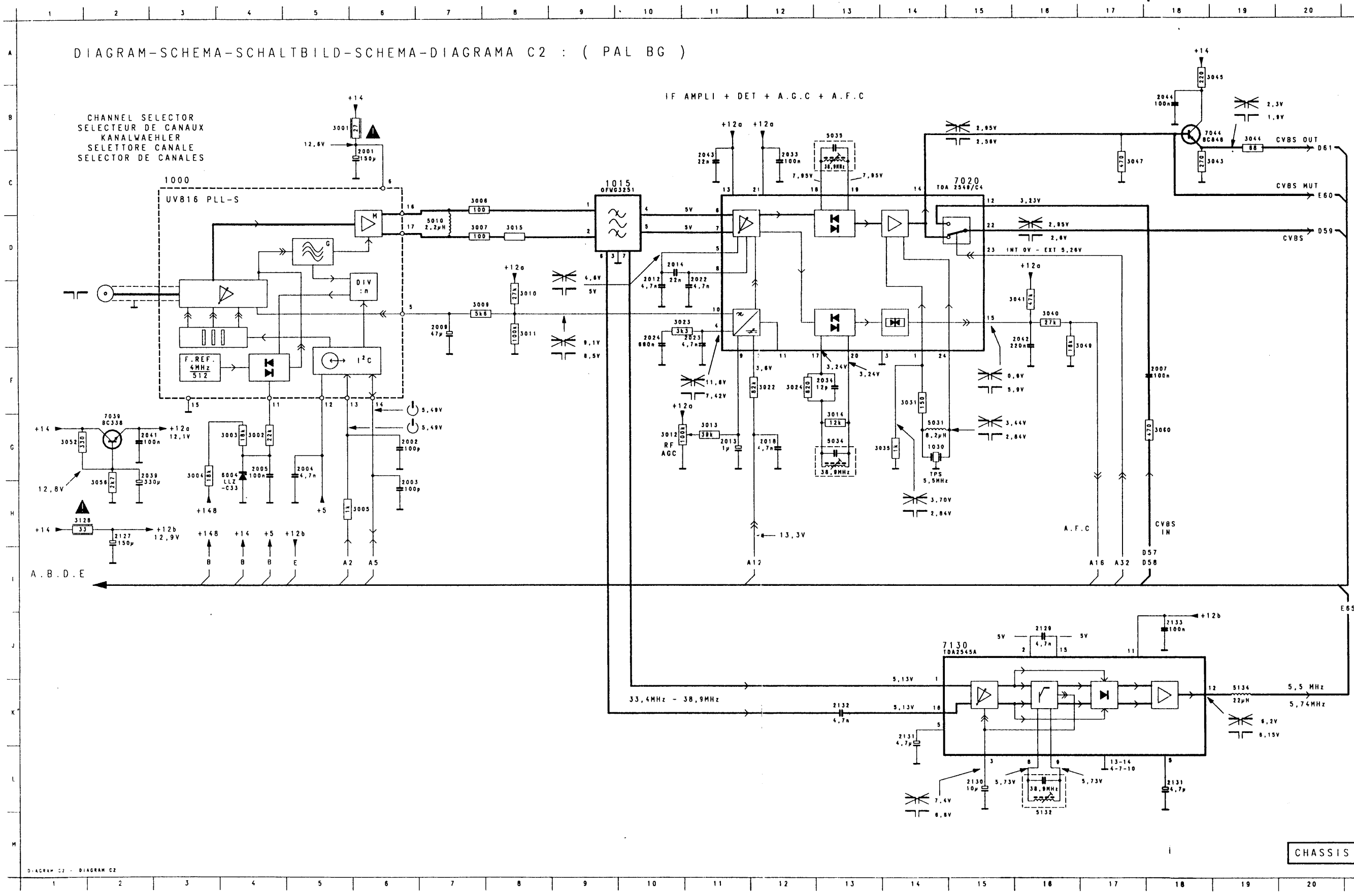


1000 3C
1015 10C
1030 14G
2001 6C
2002 6G
2003 6H
2004 5G
2005 4G
2007 18F
2009 7E
2012 10D
2013 11G
2014 10D
2018 12G
2022 11D
2023 11E
2024 10E
2033 12C
2034 13F
2039 2G
2041 2G
2042 16E
2043 11C
2044 18B
2127 2H
2129 16J
2130 15L
2131 18L
2131 14K
2132 13K
2133 18J
3001 5B
3002 4G
3003 4G
3004 3G
3005 6H
3006 7C
3007 7D
3009 7E
3010 8E
3011 8E
3012 10G
3013 11G
3014 13G
3015 8D
3022 12F
3023 10E
3024 12F
3031 14F
3035 14G
3040 16E
3041 16E
3043 19C
3044 19B
3045 19A
3047 17C
3049 17E
3052 1G
3056 2H
3060 18G
3128 1H
5010 7D
5031 14G
5034 13G
5035 13B
5132 16M
5134 19K
6004 4G
7020 15C
7039 2G
7044 19B
7130 14J

# DIAGRAM-SCHEMA-SCHALTBILD-SCHEMA-DIAGRAMA C3 : (PAL ITALY - PAL / SECAM BG)

CHANNEL SELECTOR
SELECTEUR DE CANAUX
KANALWAEHLER
SELETTORE CANALE
SELECTOR DE CANALES

1000 UV816 PLL-S

F AMPLI + DET + A.G.C + A.F.C

1016 OFVC1981

1020 OFW08250

7020 TDA 2546/C4

7130 TDA2545A

7039 BC338

7044 BC848

CVBS OUT → D81

CVBS MUT → E60

CVBS → D59

CVBS IN ← D57 D58

A.F.C → A16 A32

+12a 12,1V

+12b 12,9V

13,3V → A12

A.B.D.E

E65

33,4MHz - 38,9MHz

5,5 MHz

5,74MHz

1000 3C
1016 10C
1020 10F
1030 14G
A 2001 6C
2002 6G
2003 6H
2004 5G
2005 4G
2007 18F
B 2009 7E
2012 10D
2013 11G
2014 10D
2018 12G
2022 11D
C 2023 11E
2024 10E
2033 12C
2034 13F
2039 2G
2041 2G
2042 16E
D 2043 11C
2044 18B
2127 2H
2129 16J
2130 15L
2131 18L
2131 14K
E 2132 13K
2133 18J
3001 5B
3002 4G
3003 4G
F 3004 3G
3005 6H
3006 7C
3007 7D
3009 7E
3010 8E
3011 8E
3012 10G
G 3013 11G
3014 13G
3015 8D
3022 12F
3023 10E
3024 12F
H 3031 14F
3035 14G
3040 16E
3041 16E
3043 19C
3044 19B
3045 19A
I 3047 17C
3049 17E
3052 1G
3056 2H
3060 18G
3128 1H
J 5010 7D
5031 14G
5034 13G
5035 13B
5132 16M
5134 19K
6004 4G
K 7020 15C
7039 2G
7044 19B
7130 14J



CHASSIS G110

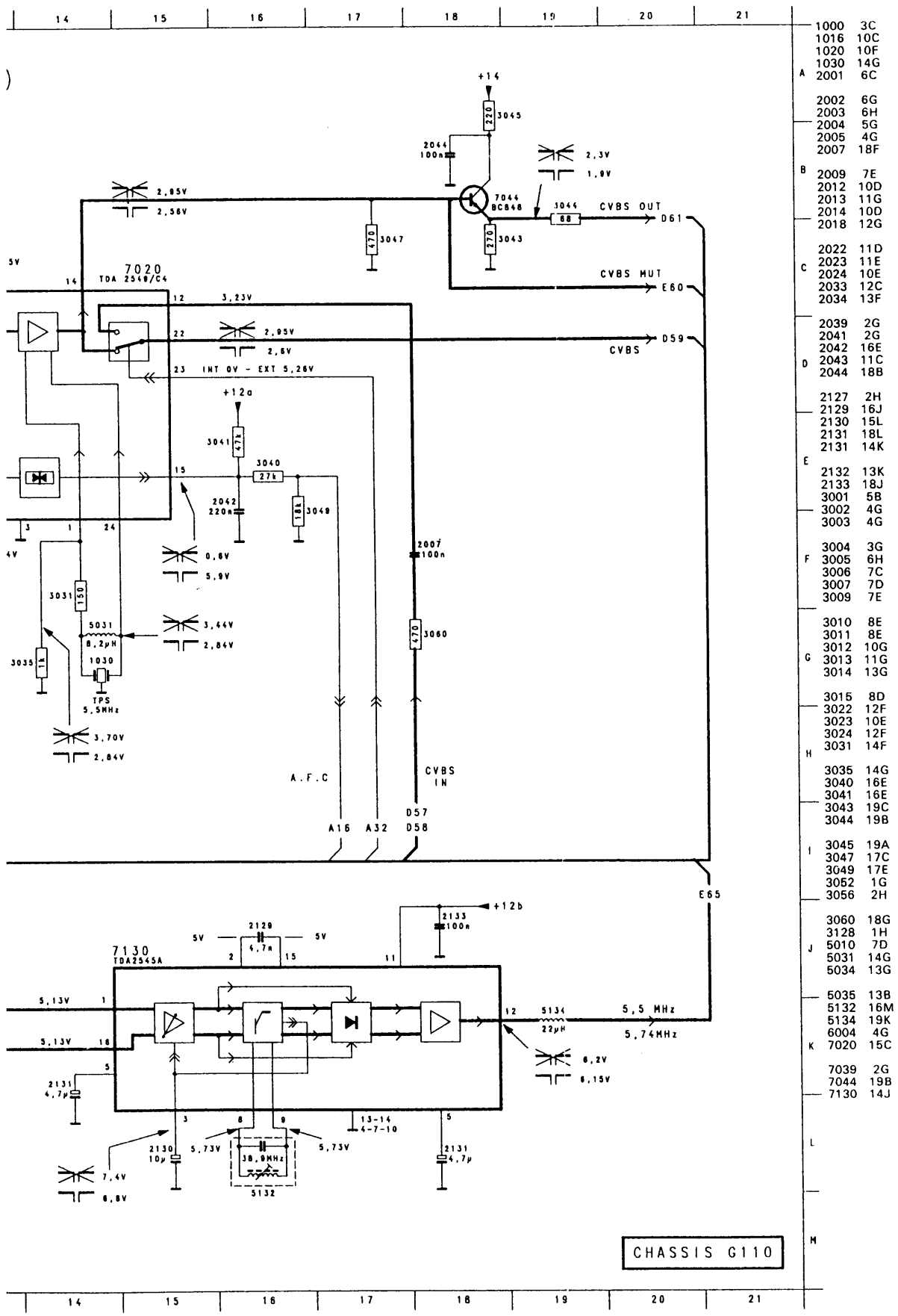


| | | |
|---|---|---|
| | 1000 | 3C |
| | 1016 | 10C |
| | 1020 | 10F |
| | 1030 | 14G |
| A | 2001 | 6C |
| | 2002 | 6G |
| | 2003 | 6H |
| | 2004 | 5G |
| | 2005 | 4G |
| | 2007 | 18F |
| B | 2009 | 7E |
| | 2012 | 10D |
| | 2013 | 11G |
| | 2014 | 10D |
| | 2018 | 12G |
| | 2022 | 11D |
| C | 2023 | 11E |
| | 2024 | 10E |
| | 2033 | 12C |
| | 2034 | 13F |
| | 2039 | 2G |
| | 2041 | 2G |
| | 2042 | 16E |
| D | 2043 | 11C |
| | 2044 | 18B |
| | 2127 | 2H |
| | 2129 | 16J |
| | 2130 | 15L |
| | 2131 | 18L |
| | 2131 | 14K |
| E | 2132 | 13K |
| | 2133 | 18J |
| | 3001 | 5B |
| | 3002 | 4G |
| | 3003 | 4G |
| | 3004 | 3G |
| F | 3005 | 6H |
| | 3006 | 7C |
| | 3007 | 7D |
| | 3009 | 7E |
| | 3010 | 8E |
| | 3011 | 8E |
| | 3012 | 10G |
| G | 3013 | 11G |
| | 3014 | 13G |
| | 3015 | 8D |
| | 3022 | 12F |
| | 3023 | 10E |
| | 3024 | 12F |
| H | 3031 | 14F |
| | 3035 | 14G |
| | 3040 | 16E |
| | 3041 | 16E |
| | 3043 | 19C |
| | 3044 | 19B |
| | 3045 | 19A |
| I | 3047 | 17C |
| | 3049 | 17E |
| | 3052 | 1G |
| | 3056 | 2H |
| | 3060 | 18G |
| | 3128 | 1H |
| J | 5010 | 7D |
| | 5031 | 14G |
| | 5034 | 13G |
| | 5035 | 13B |
| | 5132 | 16M |
| | 5134 | 19K |
| | 6004 | 4G |
| K | 7020 | 15C |
| | 7039 | 2G |
| | 7044 | 19B |
| | 7130 | 14J |

## OSCILLOGRAMS BELONGING TO DIAGRAM D

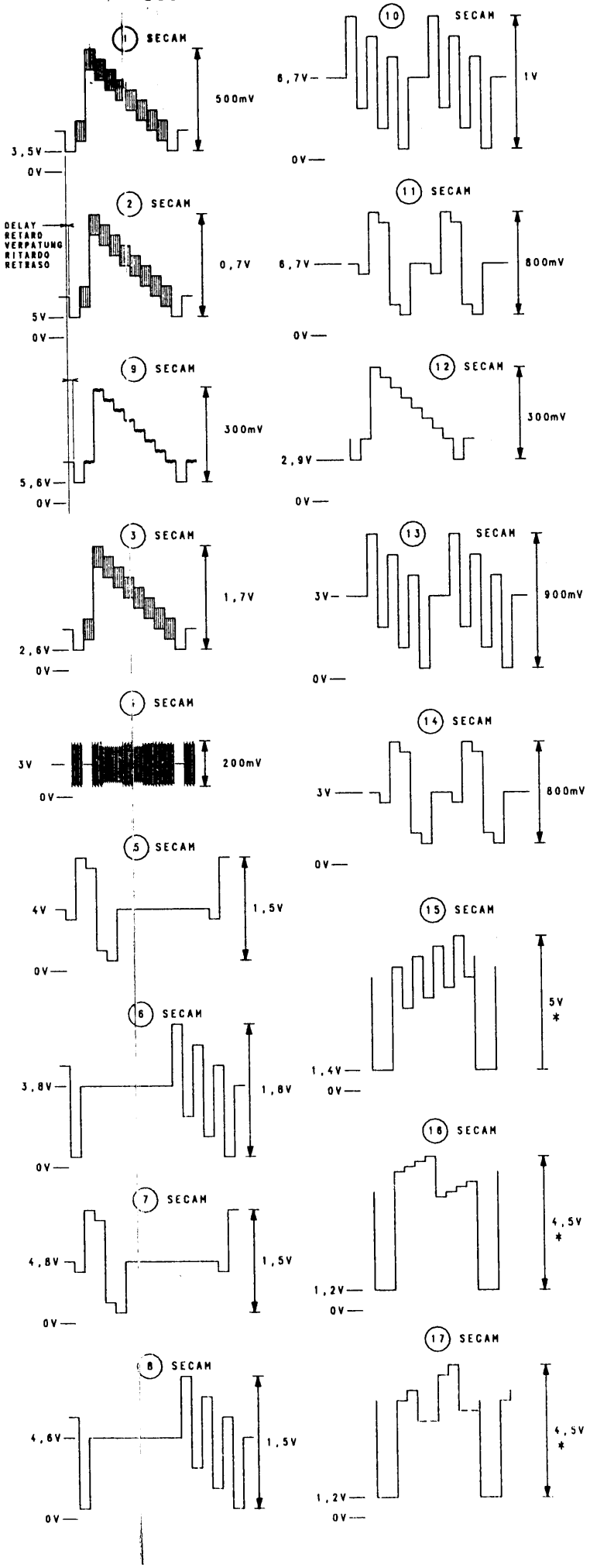


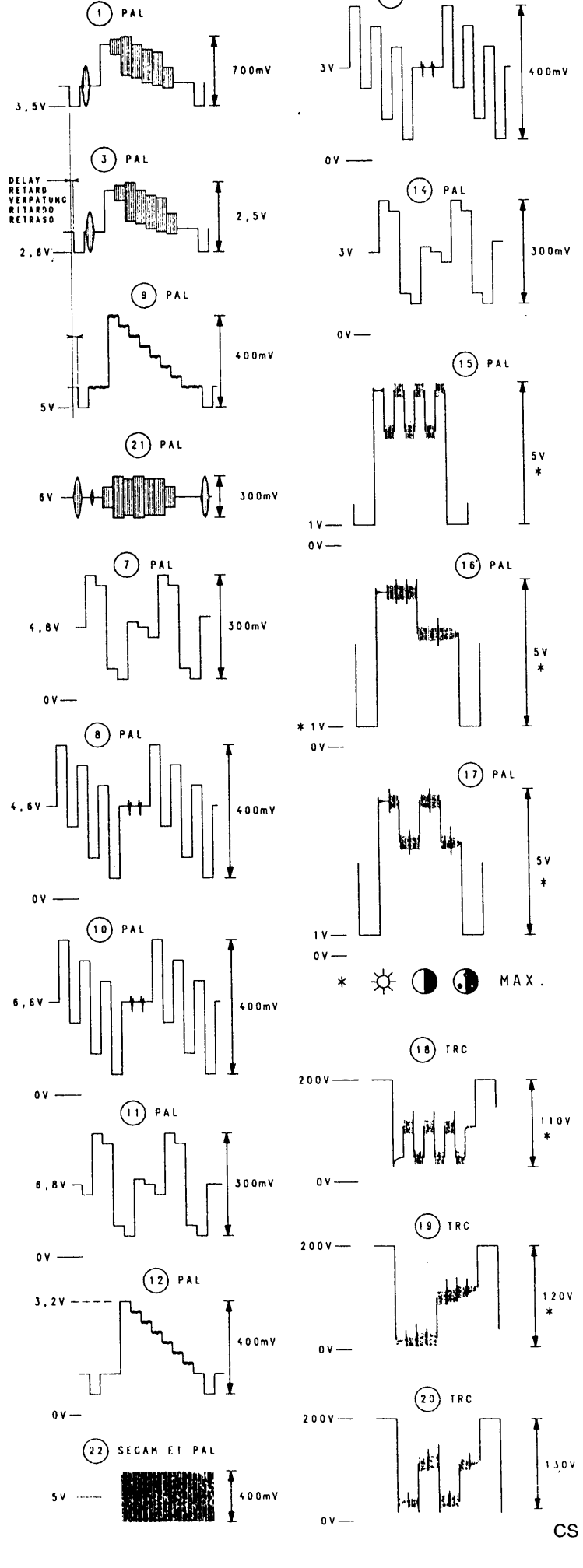


11
CHASSIS G110 SVHS

12 CHASSIS G110 SVHS

# DIAGRAM-SCHEMA-SCHALTBILD-SCHEMA DIAGRAMA D

CHROMINANCE + LUMINANCE
FARBART + LEUCHTDICHTE
CROMINANZA + LUMINANZA
CROMIANANCIA + LUMINANCIA

SVHS/TV

SVHS POSITION

REMARKS-REMARQUES-ANMERKUNGEN-NOTE-NOTE

1) NOT PRESENT IN PAL SETS
ABSENT DANS LES APPAREILS PAL
NICHT ANWESEND IN GERAETEN PAL
ASSENTE SUI MODELLI PAL
AUSENTE SOBRE MODELLOS PAL

2) NOT PRESENT WITH 7425=TDA4585
ABSENT SI 7425=TDA4585
NICHT ANWESEND MIT 7425=TDA4585
ASSENTE CON 7425=TDA4585
AUSENTE CON 7425=TDA4585

12 CHASSIS G110 SVHS

CHROMINANCE + LUMINANCE
FARBART + LEUCHTDICHTE
CROMINANZA + LUMINANZA
CHROMIANANCIA + LUMINANCIA

7350 TDA8390/N3

7305 TDA8451/N5

7425 TDA4585/V4

7350 TDA8390/N3-2B

7315 TDA8490/N4

to CRT panel

1996 DECODEUR TXT
VIDEOTEXT DECODER
DECODIFICATORE TELEVIDEO
DECODIFICADOR DE TELETEXTO

CHASSIS G110

## INDEX BELONGING TO DIAGRAM D

| | | | | | |
|---|---|---|---|---|---|
| 48 | 21J | 2871 | 19I | 3892 | 28K |
| 1G14 | 29B | 2872 | 19K | 3900 | 11F |
| 1G17 | 29L | 2873 | 20K | 3901 | 11F |
| 1G18 | 31L | 2874 | 20K | 3902 | 11D |
| 1G25 | 30J | 2875 | 21K | 3903 | 11D |
| 1M31 | 2A | 2877 | 22H | 3904 | 11D |
| 1M36 | 2A | 2900 | 12F | 3905 | 12D |
| 1352 | 14B | 2901 | 12D | 3906 | 10E |
| 2G14 | 30C | 2902 | 12E | 3907 | 10E |
| 2G17 | 30L | 2903 | 11E | 3908 | 3A |
| 2G18 | 31L | 2904 | 10E | 3909 | 11E |
| 2G25 | 30J | 2905 | 11C | 3910 | 11B |
| 2301 | 19F | 2906 | 2C | 3911 | 10C |
| 2302 | 19F | 2907 | 3E | 3912 | 10C |
| 2303 | 18F | 2908 | 4C | 3913 | 2C |
| 2304 | 19F | 2909 | 2D | 3914 | 3C |
| 2305 | 17C | 2910 | 11C | 3915 | 2D |
| 2306 | 17D | 2911 | 3E | 3916 | 3D |
| 2307 | 20E | 2912 | 3A | 3917 | 3C |
| 2310 | 14H | 3G14 | 30D | 3918 | 3D |
| 2311 | 15H | 3G17 | 30L | 3919 | 3E |
| 2312 | 10K | 3G18 | 29J | 3922 | 28K |
| 2313 | 10K | 3G25 | 31J | 3926 | 3B |
| 2314 | 9J | 3M26 | 2A | 3936 | 2C |
| 2315 | 10I | 3M31 | 2A | 3937 | 2C |
| 2316 | 10J | 3303 | 18F | 3938 | 3A |
| 2317 | 10J | 3311 | 5D | 3939 | 2A |
| 2318 | 10I | 3313 | 24B | 4G13 | 29A |
| 2321 | 11H | 3314 | 9J | 4G14 | 29G |
| 2322 | 11H | 3315 | 4D | 4G17 | 31J |
| 2323 | 12H | 3318 | 20B | 4G18 | 31L |
| 2324 | 13H | 3321 | 11H | 5G14 | 29H |
| 2325 | 13H | 3322 | 11H | 5G17 | 30L |
| 2326 | 14H | 3327 | 16I | 5G18 | 29K |
| 2327 | 16I | 3328 | 16J | 5316 | 9I |
| 2328 | 16J | 3329 | 16K | 5321 | 12H |
| 2330 | 13A | 3330 | 15G | 5327 | 16I |
| 2331 | 14F | 3334 | 25I | 5328 | 16J |
| 2332 | 13F | 3340 | 23C | 5330 | 8F |
| 2334 | 20C | 3341 | 23D | 5331 | 6H |
| 2335 | 26H | 3346 | 29H | 5332 | 27A |
| 2337 | 28F | 3347 | 29F | 5333 | 20E |
| 2338 | 27F | 3348 | 27H | 5334 | 20E |
| 2339 | 28F | 3349 | 28G | 5335 | 23A |
| 2340 | 24F | 3352 | 7I | 5384 | 28A |
| 2341 | 30B | 3354 | 6J | 5900 | 12E |
| 2342 | 27F | 3361 | 5C | 6G14 | 30C |
| 2343 | 20D | 3362 | 7H | 6G17 | 31L |
| 2344 | 26F | 3363 | 7I | 6G18 | 29K |
| 2345 | 27F | 3364 | 7H | 6335 | 25G |
| 2346 | 29E | 3365 | 7H | 6336 | 15F |
| 2349 | 26F | 3366 | 17K | 6367 | 7I |
| 2350 | 25F | 3367 | 19B | 6421 | 20F |
| 2351 | 14F | 3368 | 28A | 6864 | 24I |
| 2352 | 15B | 3369 | 28A | 6901 | 10E |
| 2353 | 14A | 3421 | 20E | 7G14 | 30F |
| 2355 | 13A | 3422 | 20F | 7G18 | 29K |
| 2356 | 12A | 3424 | 21F | 7305 | 17B |
| 2357 | 9F | 3425 | 21F | 7315 | 15H |
| 2361 | 5C | 3426 | 21F | 7316 | 16K |
| 2362 | 6C | 3427 | 22F | 7350 | 16B |
| 2363 | 9C | 3431 | 20B | 7350 | 29B |
| 2364 | 6E | 3432 | 22B | 7351 | 28G |
| 2365 | 7I | 3433 | 23C | 7360 | 8B |
| 2366 | 5D | 3434 | 20C | 7363 | 7H |
| 2367 | 8C | 3435 | 20D | 7364 | 6H |
| 2369 | 27B | 3436 | 22E | 7365 | 19B |
| 2370 | 27A | 3437 | 23E | 7422 | 20F |
| 2371 | 7F | 3439 | 21G | 7423 | 22F |
| 2372 | 8F | 3844 | 28J | 7425 | 21B |
| 2373 | 6F | 3850 | 21K | 7857 | 20I |
| 2374 | 5E | 3851 | 22K | 7860 | 23I |
| 2375 | 7F | 3852 | 22K | 7861 | 23H |
| 2378 | 8C | 3853 | 22K | 7870 | 20I |
| 2379 | 8H | 3854 | 21I | 7900 | 12D |
| 2382 | 26A | 3855 | 22K | 7901 | 10E |
| 2399 | 5D | 3856 | 23K | 7902 | 10C |
| 2421 | 21E | 3857 | 22I | 7903 | 4D |
| 2422 | 19G | 3858 | 22I | 7904 | 11E |
| 2423 | 22E | 3859 | 21H | 7904 | 12F |
| 2431 | 21E | 3860 | 23I | 7904 | 3D |
| 2432 | 24C | 3861 | 22H | 7905 | 11C |
| 2433 | 23E | 3862 | 23H | 8G18 | 29K |
| 2434 | 23D | 3863 | 24H | 9999 | 1A |
| 2435 | 23C | 3866 | 23K | | |
| 2436 | 23E | 3867 | 23H | | |
| 2437 | 22E | 3872 | 19I | | |
| 2438 | 22E | 3873 | 19I | | |
| 2439 | 21E | 3874 | 19I | | |
| 2440 | 21C | 3877 | 20K | | |
| 2441 | 21D | 3878 | 21K | | |
| 2442 | 20C | 3879 | 20K | | |
| 2443 | 20D | 3880 | 21K | | |
| 2445 | 23B | 3889 | 23K | | |
| 2860 | 22H | 3891 | 28K | | |

13
CHASSIS G110 SVHS

R-G-B AMPLIFIER AMPLIFICATEUR R-V-B R-G-B VERSTAERKER AMPLIFICATORE R-V-B AMPLIFIC.R-G-B

1991

from chassis

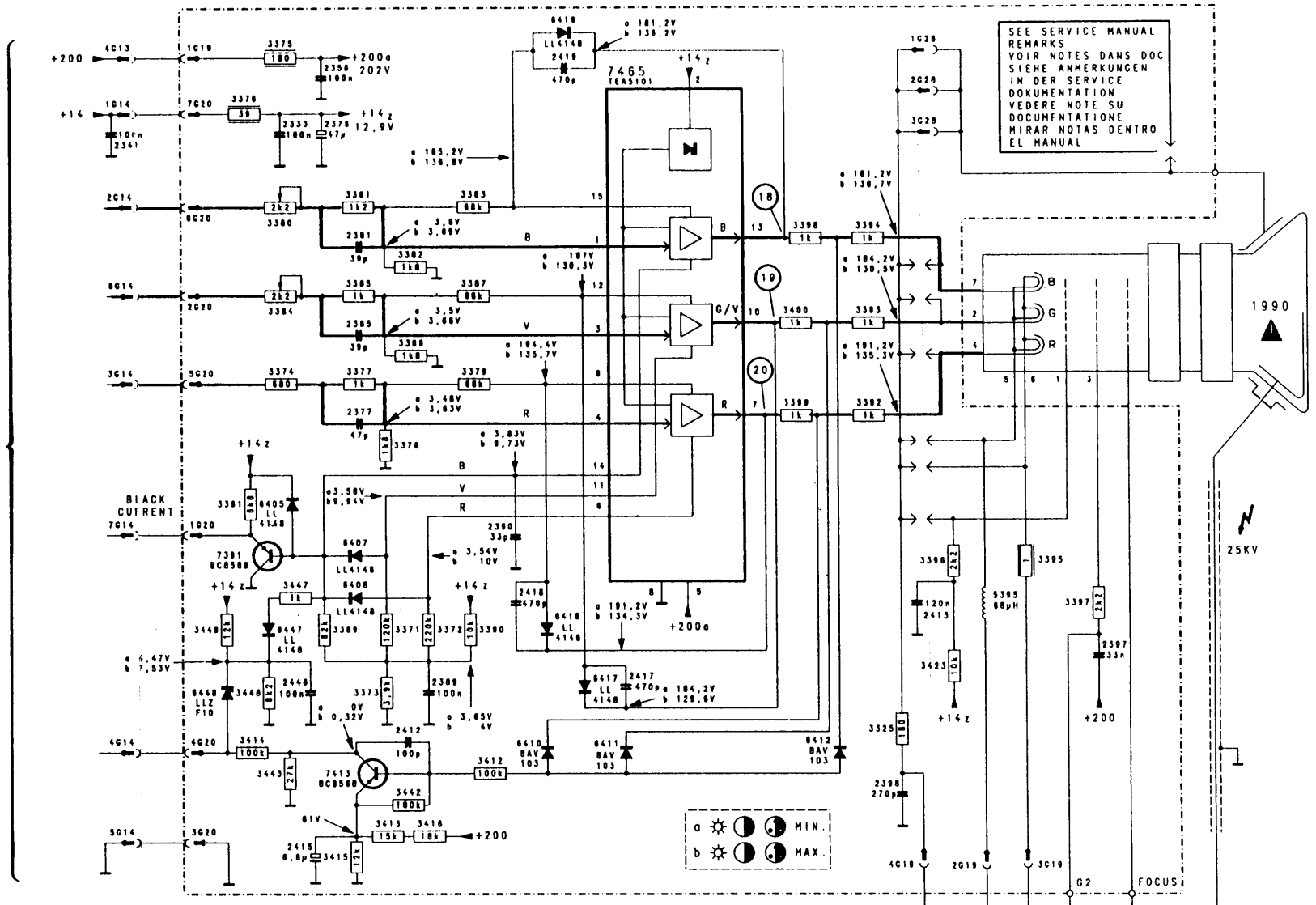


## SVHS SOUND DIAGRAM

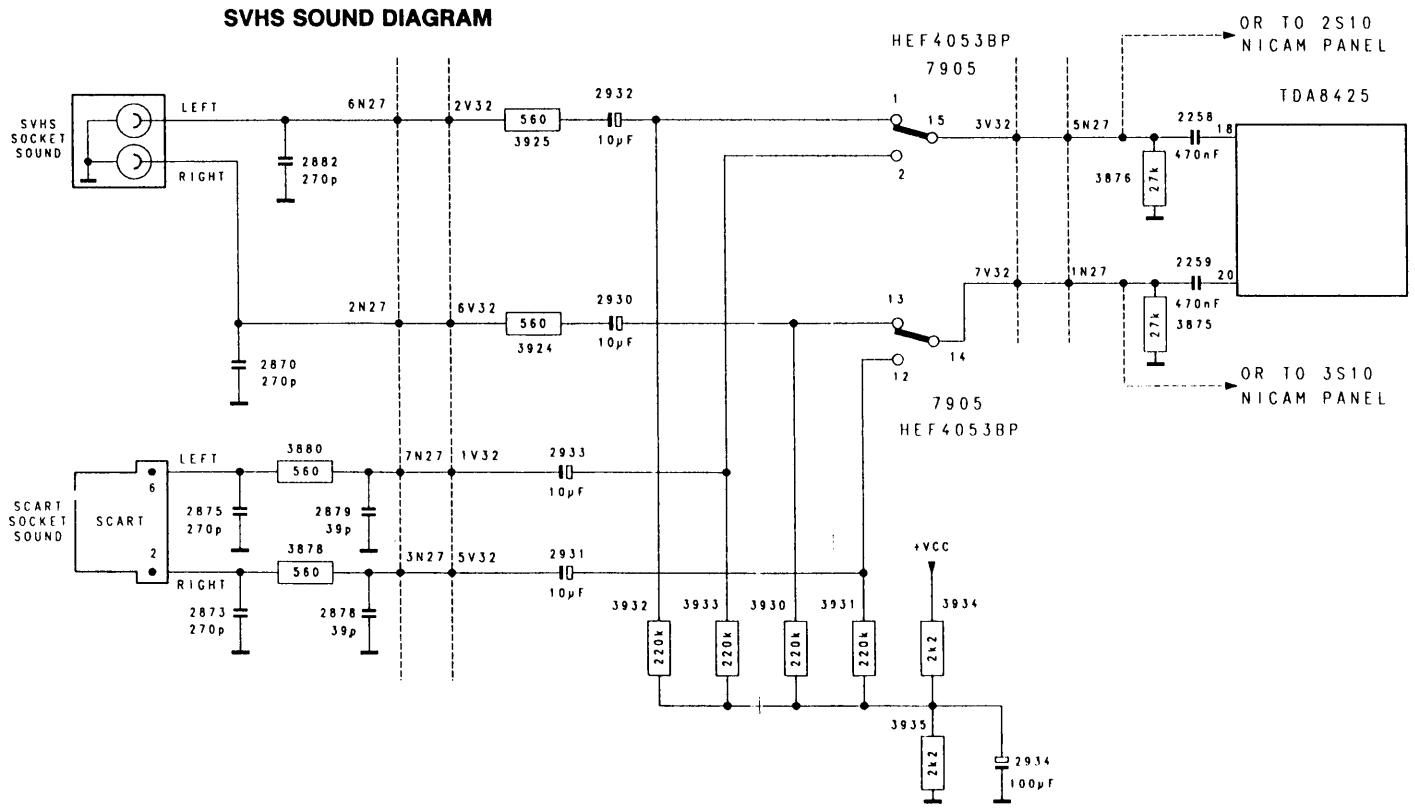

17 CHASSIS G110 SVHS

# TXT-DECODER-DECODIFICATORE TELETESTO-DECODEUR TELETEXTE-DECODIFICADOR DE TELETEXTO-FLOF

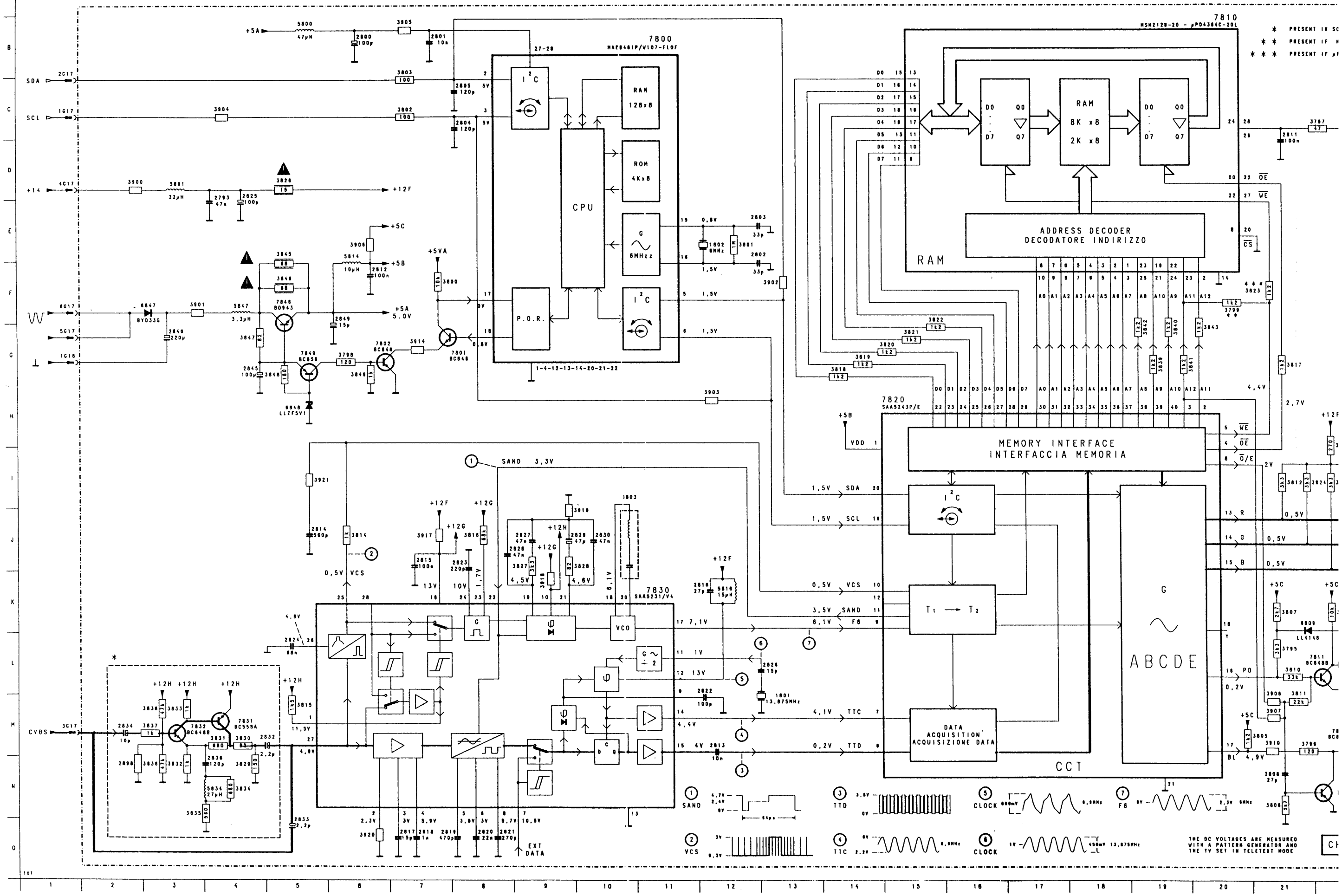

17 CHASSIS G110 SVHS

## TELETEXTO-FLOF

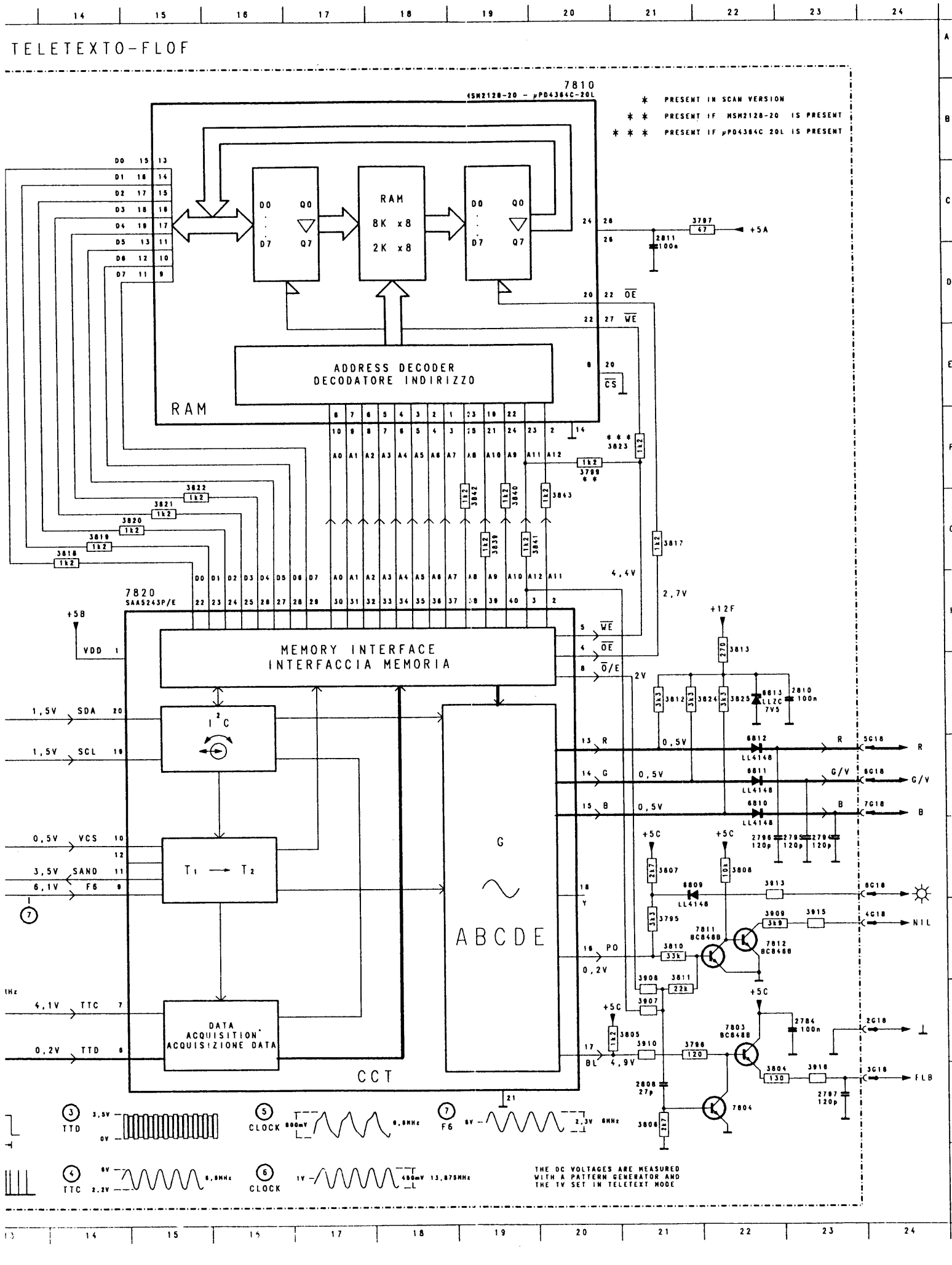


| | | | | |
|---|---|---|---|---|
| A | 1G17 | 1C | 3846 | 5F |
| | 1G18 | 1G | 3847 | 4G |
| | 1801 | 13M | 3848 | 5G |
| | 1802 | 12E | 3849 | 6G |
| | 2G17 | 1B | 3900 | 2D |
| B | 2G18 | 24M | 3901 | 3F |
| | 2784 | 23M | 3902 | 13F |
| | 2793 | 4D | 3903 | 12H |
| | 2797 | 23N | 3904 | 4C |
| | 2800 | 6B | 3905 | 7B |
| C | 2801 | 7B | 3906 | 6E |
| | 2802 | 12E | 3907 | 21M |
| | 2803 | 12E | 3908 | 21L |
| | 2804 | 8C | 3909 | 22L |
| | 2805 | 8C | 3910 | 21M |
| D | 2808 | 21N | 3913 | 22K |
| | 2810 | 23I | 3914 | 7G |
| | 2811 | 21C | 3915 | 23L |
| | 2812 | 6F | 3916 | 23N |
| | 2813 | 12M | 3917 | 7J |
| E | 2814 | 5J | 3918 | 9K |
| | 2815 | 7J | 3919 | 10J |
| | 2816 | 12K | 3920 | 6O |
| | 2817 | 7O | 3921 | 5I |
| | 2818 | 7O | 4G17 | 1D |
| F | 2819 | 7O | 4G18 | 24L |
| | 2820 | 8O | 5G17 | 1G |
| | 2821 | 8O | 5G18 | 24J |
| | 2822 | 12L | 5800 | 5B |
| | 2823 | 8J | 5801 | 3D |
| | 2824 | 5L | 5803 | 10I |
| | 2825 | 4D | 5814 | 6E |
| | 2826 | 13L | 5816 | 12K |
| | 2827 | 9J | 5834 | 4N |
| | 2828 | 9J | 5847 | 4F |
| G | 2829 | 10J | 6G17 | 1F |
| | 2830 | 10J | 6G18 | 24J |
| | 2832 | 5M | 6809 | 21K |
| | 2833 | 5O | 6810 | 22J |
| | 2834 | 2M | 6811 | 22J |
| H | 2836 | 4N | 6812 | 22J |
| | 2845 | 4G | 6813 | 22I |
| | 2846 | 3G | 6847 | 3F |
| | 2849 | 6F | 6848 | 5H |
| | 2898 | 2N | 7G18 | 24J |
| | 3G17 | 1M | 7800 | 11B |
| | 3G18 | 24N | 7801 | 8G |
| | 3795 | 21L | 7802 | 6G |
| | 3796 | 21M | 7803 | 22M |
| | 3797 | 22C | 7804 | 22N |
| I | 3798 | 6G | 7810 | 20B |
| | 3799 | 20F | 7811 | 22L |
| | 3800 | 8F | 7812 | 22L |
| | 3801 | 12E | 7820 | 14H |
| | 3802 | 7C | 7830 | 11K |
| J | 3803 | 7B | 7831 | 4M |
| | 3804 | 22N | 7832 | 3M |
| | 3805 | 21M | 7846 | 5F |
| | 3806 | 21N | 7849 | 5G |
| | 3807 | 21K | 8G18 | 24K |
| K | 3808 | 22K | | |
| | 3810 | 21L | | |
| | 3811 | 21L | | |
| | 3812 | 21I | | |
| | 3813 | 22H | | |
| L | 3814 | 6J | | |
| | 3815 | 5M | | |
| | 3816 | 8J | | |
| | 3817 | 21G | | |
| | 3818 | 14G | | |
| M | 3819 | 14G | | |
| | 3820 | 15G | | |
| | 3821 | 15G | | |
| | 3822 | 15F | | |
| | 3824 | 22I | | |
| N | 3825 | 22I | | |
| | 3826 | 5D | | |
| | 3827 | 9J | | |
| | 3828 | 10J | | |
| | 3829 | 4N | | |
| O | 3830 | 4M | | |
| | 3831 | 4M | | |
| | 3832 | 3N | | |
| | 3833 | 3M | | |
| | 3834 | 4N | | |
| | 3835 | 3N | | |
| | 3836 | 3M | | |
| | 3837 | 3M | | |
| | 3838 | 3N | | |
| | 3839 | 19G | | |
| | 3840 | 19G | | |
| | 3841 | 20G | | |
| | 3842 | 19G | | |
| | 3843 | 20G | | |
| | 3845 | 5E | | |

### 1003 TXT FLOF MODULE

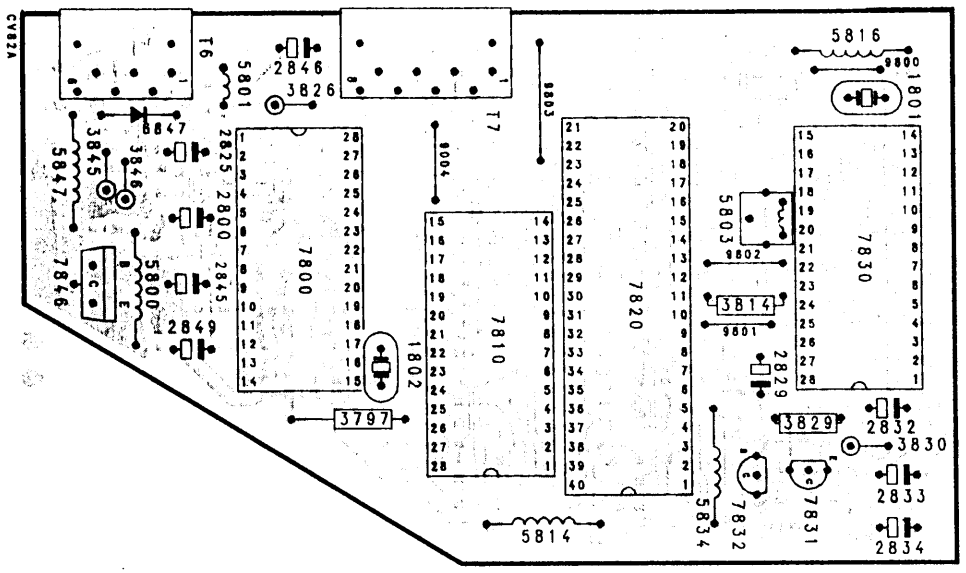


### 1003 TXT FLOF MODULE

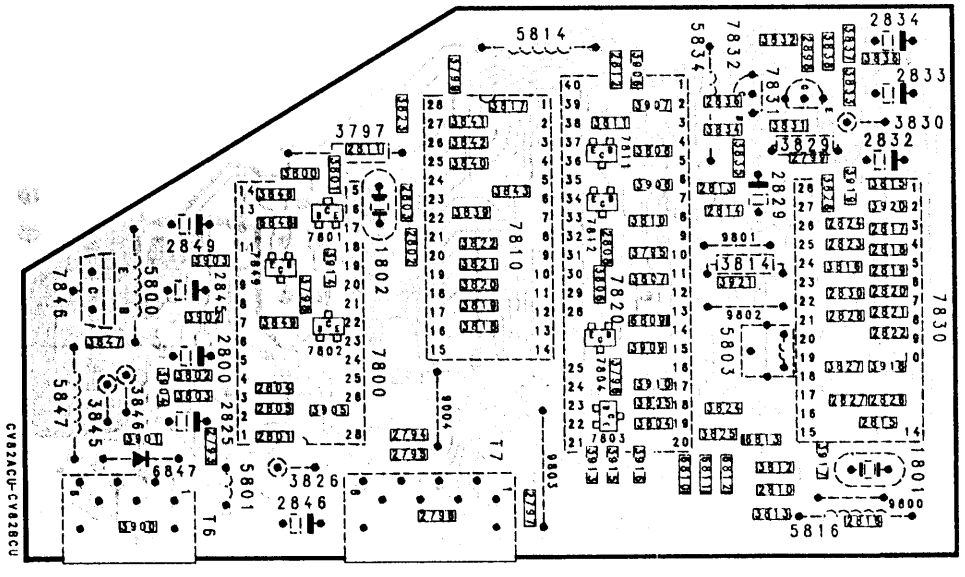

18 CHASSIS G110 SVHS

DIAGRAM-SCHEMA-SCHALTBILD-SCHEMA-DIAGRAMA E

STEREO SOUND MODULE
STEREO TON MODUL
MODULO SONIDO STEREO
MÓDULOS SONIDO ESTEREOFÓNIE

AM-SOUND-SON AM

REMARKS-REMARQUES-ANMERKUNGEN-NOTE-NOTE

1) IN FRENCH VERSION
DANS LA VERSION FRANCAISE
IN FRANKREICH GERAETEN
SUI MODELLI E FRANCESE
SOBRE MODELLOS FRANCIA

2) NOT PRESENT IN FRENCH VERSION
ABSENT DANS LA VERSION FRANCE
NICHT ANWESEND IN FRANKREICH GERAETEN
ASSENTE NEGLI APPARECHI FRANCESE
AUSENTE SOBRE MODELLOS FRANCIA

7170 U28298

7220 TDA8405/V2

7260 TDA8425/V1

7270 TDA1521/M4

IDENT.

I²C

CONTROL

PSEUDO

ADJUST. FILTER 117,5Hz

ADJUST. FILTER 274,1Hz

SCART R

SCART L

SDA

SCL

MUTE

CVBS (MUTE)

AUDIO IN

1) TDA8405 (7220)

18
CHASSIS G110 SVHS

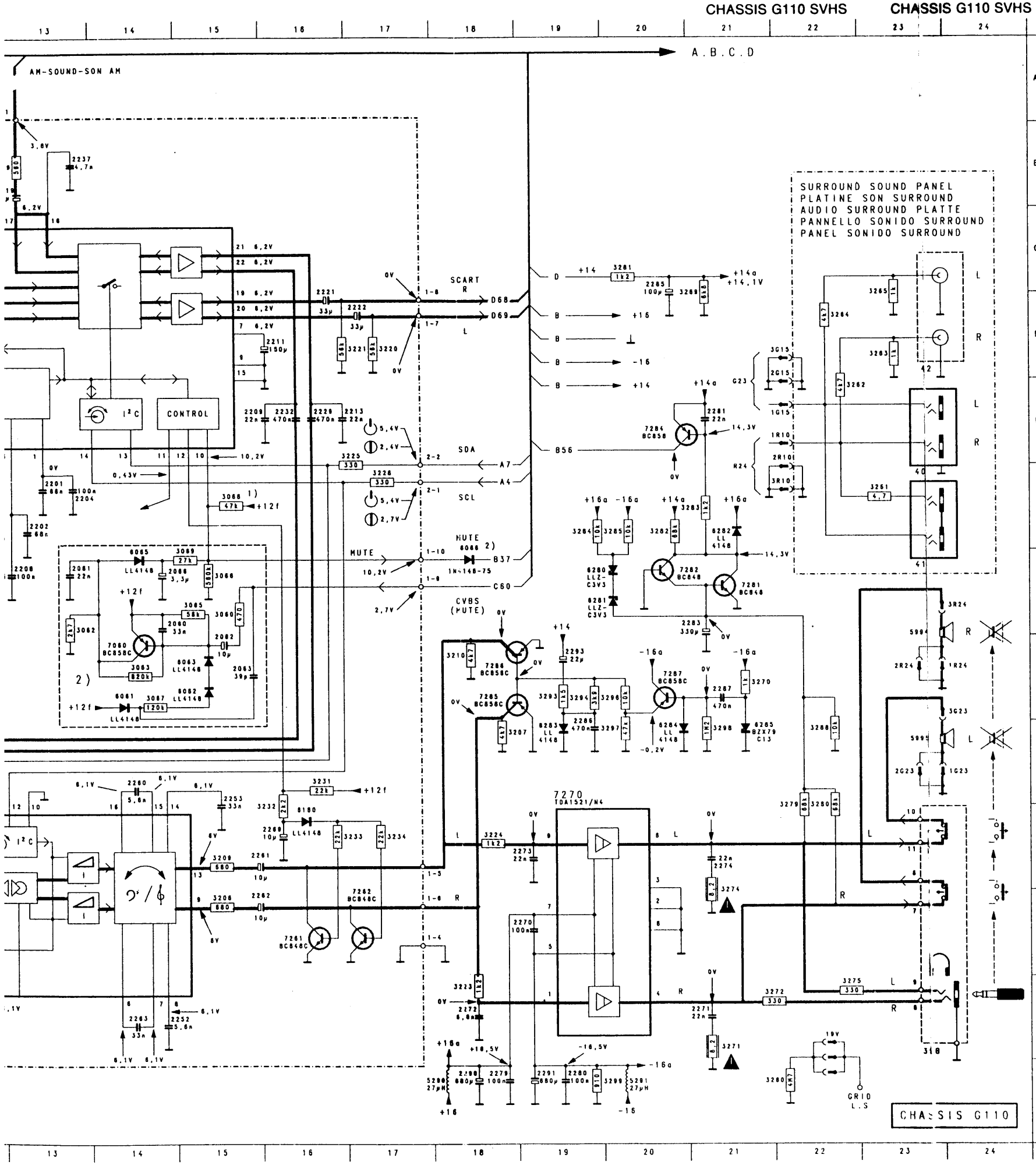


| | | | | | | | |
|---|---|---|---|---|---|---|---|
| | 1G15 | 22E | 2272 | 18L | 3274 | 21J |
| | 1G23 | 24I | 2273 | 19J | 3275 | 22L |
| | 1R10 | 22E | 2274 | 21J | 3279 | 22J |
| | 1R24 | 24H | 2279 | 18M | 3280 | 22J |
| A | 1161 | 4J | 2280 | 19M | 3281 | 20C |
| | 1161 | 4D | 2281 | 21E | 3282 | 20F |
| | 1170 | 4C | 2283 | 21G | 3283 | 21F |
| | 1170 | 3I | 2285 | 20C | 3284 | 19F |
| | 1171 | 3J | 2286 | 19I | 3285 | 20F |
| | 2G15 | 22D | 2287 | 21H | 3288 | 22I |
| | 2G23 | 23I | 2290 | 18M | 3289 | 21C |
| B | 2R10 | 22E | 2291 | 19M | 3293 | 19H |
| | 2R24 | 23H | 2293 | 19H | 3294 | 19H |
| | 2060 | 15G | 2870 | 10J | 3296 | 20H |
| | 2061 | 13G | 3G15 | 22D | 3297 | 20I |
| | 2062 | 15H | 3G23 | 24H | 3298 | 21I |
| | 2063 | 15H | 3R10 | 22F | 3299 | 20M |
| | 2066 | 15G | 3R24 | 24G | 3871 | 10I |
| C | 2134 | 2D | 3060 | 15G | 3875 | 9J |
| | 2134 | 2J | 3062 | 13G | 3876 | 10J |
| | 2160 | 2J | 3063 | 14H | 5182 | 6H |
| | 2160 | 3D | 3065 | 15G | 5182 | 6B |
| | 2161 | 3J | 3066 | 15G | 5183 | 6L |
| | 2161 | 3D | 3067 | 14H | 5183 | 6F |
| | 2162 | 3K | 3068 | 16F | 5200 | 9F |
| D | 2162 | 4D | 3069 | 15G | 5290 | 18M |
| | 2163 | 4K | 3159 | 9M | 5291 | 20M |
| | 2163 | 4D | 3160 | 3D | 5994 | 23G |
| | 2164 | 4I | 3160 | 3K | 5995 | 23I |
| | 2165 | 5H | 3165 | 2H | 6061 | 14H |
| | 2165 | 5B | 3166 | 2I | 6062 | 15H |
| | 2169 | 7I | 3167 | 3I | 6063 | 15H |
| | 2170 | 3C | 3169 | 3H | 6065 | 14G |
| E | 2170 | 2J | 3170 | 4I | 6066 | 18F |
| | 2173 | 4J | 3170 | 4C | 6165 | 4I |
| | 2173 | 4C | 3171 | 4I | 6166 | 3H |
| | 2174 | 4J | 3171 | 4C | 6179 | 6H |
| | 2174 | 4C | 3172 | 3D | 6180 | 16J |
| | 2179 | 5I | 3172 | 3J | 6280 | 19G |
| | 2181 | 6I | 3174 | 7H | 6281 | 19G |
| F | 2182 | 6H | 3175 | 7H | 6282 | 21F |
| | 2182 | 6B | 3176 | 6H | 6283 | 19I |
| | 2183 | 6K | 3177 | 6H | 6284 | 20I |
| | 2183 | 6E | 3178 | 7I | 6285 | 21I |
| | 2185 | 4H | 3180 | 4H | 7060 | 14H |
| | 2185 | 4B | 3181 | 4H | 7170 | 5I |
| | 2186 | 4H | 3182 | 6I | 7170 | 5C |
| | 2186 | 4B | 3182 | 6C | 7176 | 6H |
| G | 2200 | 9F | 3183 | 6K | 7200 | 7F |
| | 2201 | 13F | 3183 | 6E | 7208 | 9G |
| | 2202 | 13F | 3199 | 3D | 7220 | 9C |
| | 2203 | 8E | 3199 | 3K | 7260 | 11I |
| | 2204 | 13F | 3200 | 7E | 7261 | 16K |
| | 2205 | 8D | 3201 | 8E | 7262 | 17K |
| | 2206 | 7J | 3202 | 11G | 7270 | 19I |
| H | 2206 | 7D | 3203 | 8E | 7281 | 21G |
| | 2207 | 8E | 3204 | 9D | 7282 | 21G |
| | 2208 | 13G | 3205 | 8D | 7284 | 21E |
| | 2209 | 15E | 3206 | 15K | 7285 | 18H |
| | 2211 | 16D | 3207 | 18I | 7286 | 18H |
| | 2212 | 9C | 3208 | 11G | 7287 | 20H |
| | 2213 | 17E | 3209 | 15J | | |
| I | 2214 | 7I | 3210 | 18H | | |
| | 2214 | 7C | 3212 | 9C | | |
| | 2215 | 9E | 3213 | 8C | | |
| | 2219 | 13B | 3219 | 12B | | |
| | 2221 | 16C | 3220 | 17D | | |
| | 2222 | 17D | 3221 | 17D | | |
| | 2229 | 16E | 3222 | 10K | | |
| J | 2232 | 16E | 3223 | 18L | | |
| | 2234 | 11F | 3224 | 18J | | |
| | 2235 | 11F | 3225 | 17E | | |
| | 2236 | 10F | 3228 | 17F | | |
| | 2237 | 13B | 3231 | 16I | | |
| | 2238 | 10F | 3232 | 16J | | |
| | 2239 | 10F | 3233 | 17J | | |
| K | 2246 | 12F | 3234 | 17J | | |
| | 2247 | 12F | 3235 | 11F | | |
| | 2250 | 12B | 3239 | 10F | | |
| | 2252 | 15L | 3240 | 12F | | |
| | 2253 | 15I | 3241 | 11F | | |
| | 2254 | 12L | 3242 | 11F | | |
| | 2255 | 12L | 3243 | 11G | | |
| | 2258 | 10J | 3244 | 12F | | |
| L | 2259 | 10K | 3245 | 12G | | |
| | 2260 | 14I | 3246 | 12F | | |
| | 2261 | 15J | 3260 | 21M | | |
| | 2262 | 15K | 3261 | 23F | | |
| | 2263 | 14L | 3262 | 22E | | |
| | 2264 | 10K | 3263 | 23D | | |
| | 2265 | 10K | 3264 | 22D | | |
| M | 2266 | 10L | 3265 | 23C | | |
| | 2269 | 16J | 3270 | 21H | | |
| | 2270 | 19K | 3271 | 21L | | |
| | 2271 | 21L | 3272 | 21L | | |

21 CHASSIS G110 SVHS

# DIAGRAM-SCHEMA-SCHALTBILD-SCHEMA-DIAGRAMA E (NICAM VERSIONS)

1995 NICAM DECODER - DECODEUR NICAM - NICAM DECODER - DECODIFICATORE NICAM - DEC

| | PAL B/G | PAL I |
|---|---|---|
| 5075 | 5.5MHz | 6.0MHz |
| 2075 | 1n | 820p |
| 3075 | 820R | 1K |

ITEM 1220

| | |
|---|---|
| PAL B/G | 5.85 MHz |
| PAL I | 6.552MHz |

21
CHASSIS G110 SVHS

SURROUND SOUND PANEL
PLATINE SON SURROUND
AUDIO SURROUND PLATTE
PANNELLO SONIDO SURROUND
PANEL SONIDO SURROUND

REMARKS-REMARQUES-ANMERKUNGEN-NOTE-NOTE

1) IN PAL I VERSION
DANS LA VERSION PAL I
IN PAL I GERAETEN
SUI MODELLI E PAL I
SOBRE MODELLOS PAL I

2) IN PAL B/G VERSION
DANS LA VERSION PAL B/G
IN PAL B/G GERAETEN
SUI MODELLI E PAL B/G
SOBRE MODELLOS PAL B/G

CHASSIS G110

ESV 00109
112/925

16
CHASSIS G110 SVHS

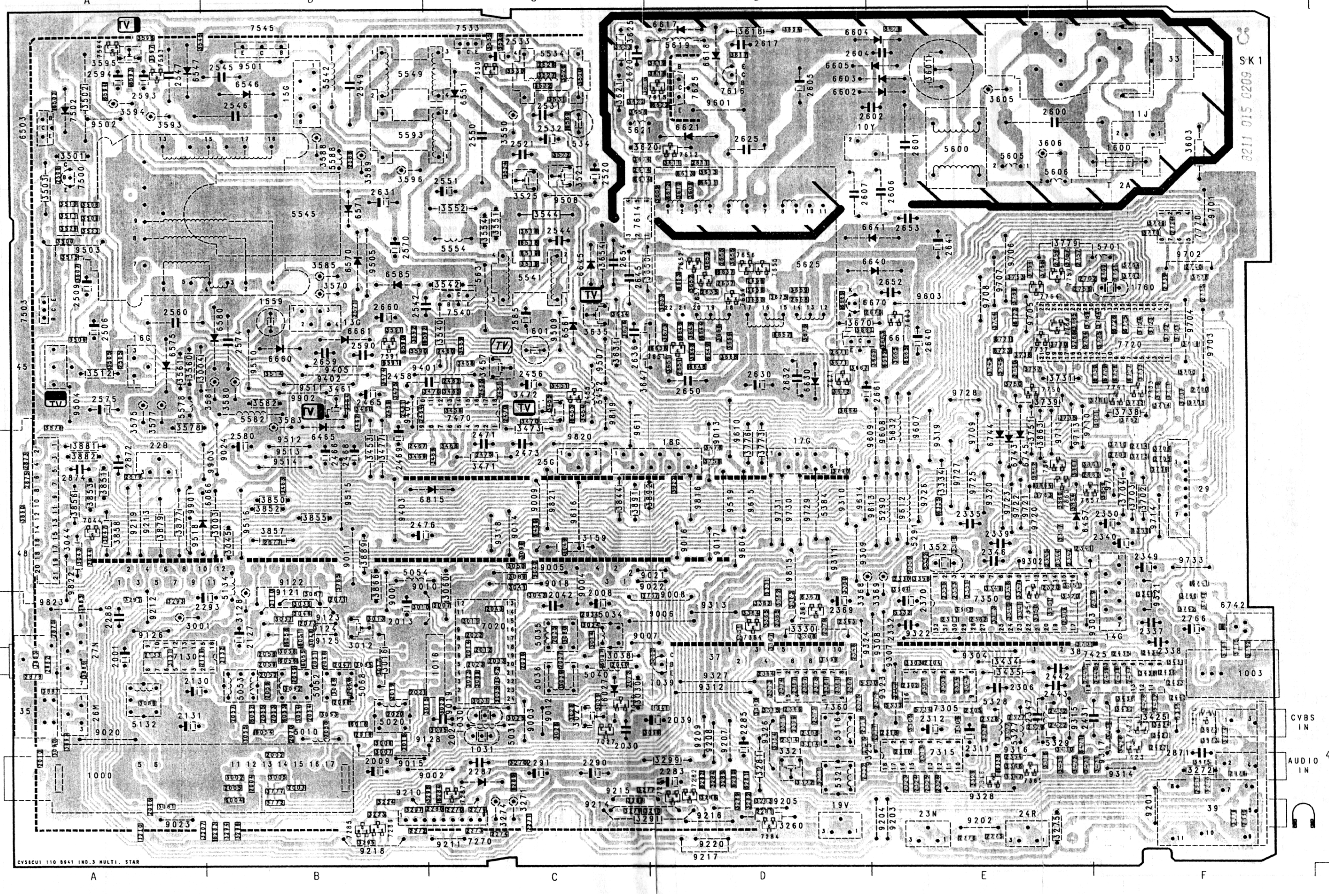

15
CHASSIS G110 SVHS

## CARRIER PANEL

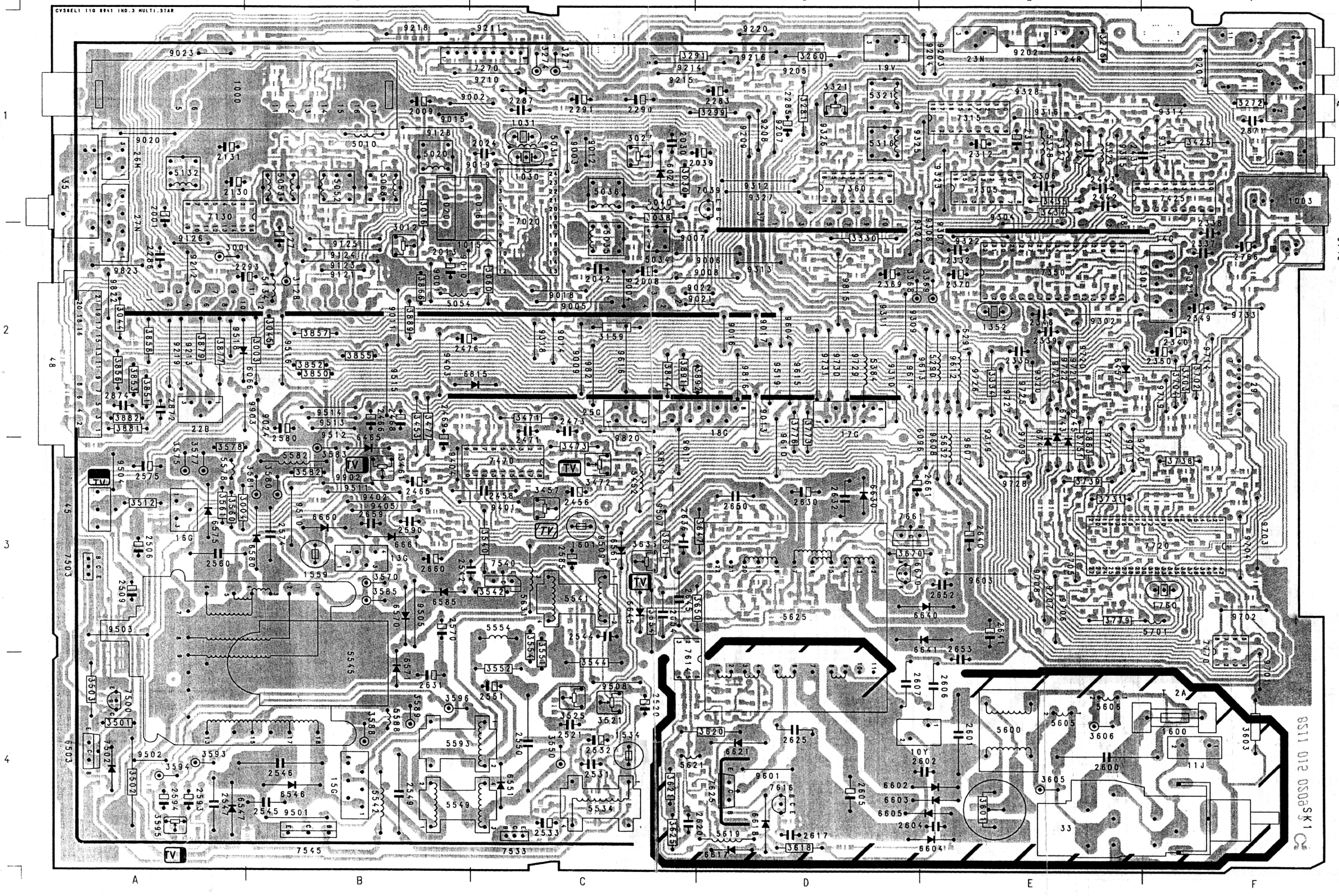


| | |
|---|---|
| 29 | F 2 |
| 33 | E 4 |
| 35 | A 1 |
| 39 | F 1 |
| 45 | A 3 |
| 48 | A 2 |
| 10Y | D 4 |
| 11J | F 4 |
| 13G | B 3 |
| 14G | F 2 |
| 15G | B 4 |
| 16G | A 3 |
| 17G | D 2 |
| 18G | D 2 |
| 19V | D 1 |
| 22B | A 2 |
| 24R | E 1 |
| 25G | C 2 |
| 26M | A 1 |
| 27N | A 1 |
| 1000 | A 1 |
| 1003 | F 1 |
| 1015 | B 2 |
| 1016 | C 1 |
| 1020 | B 1 |
| 1030 | C 1 |
| 1031 | C 1 |
| 1352 | E 2 |
| 1534 | C 4 |
| 1559 | B 3 |
| 1600 | F 4 |
| 1601 | C 3 |
| 1760 | F 3 |
| 2001 | A 1 |
| 2008 | C 2 |
| 2009 | B 1 |
| 2013 | B 2 |
| 2024 | C 1 |
| 2030 | C 1 |
| 2039 | D 1 |
| 2042 | C 2 |
| 2127 | B 2 |
| 2130 | A 1 |
| 2131 | A 1 |
| 2283 | D 1 |
| 2285 | D 1 |
| 2286 | A 2 |
| 2287 | C 1 |
| 2290 | C 1 |
| 2291 | C 1 |
| 2293 | B 2 |
| 2306 | E 1 |
| 2311 | E 1 |
| 2312 | E 1 |
| 2332 | E 2 |
| 2335 | E 2 |
| 2337 | F 2 |
| 2338 | F 1 |
| 2339 | E 2 |
| 2340 | F 2 |
| 2346 | E 2 |
| 2347 | E 1 |
| 2349 | F 2 |
| 2350 | F 2 |
| 2369 | D 2 |
| 2370 | E 2 |
| 2431 | E 1 |
| 2442 | E 1 |
| 2443 | E 1 |
| 2456 | C 3 |
| 2458 | C 3 |
| 2465 | B 3 |
| 2466 | B 2 |
| 2468 | B 2 |
| 2469 | B 2 |
| 2471 | C 3 |
| 2473 | C 2 |
| 2476 | B 2 |
| 2506 | A 3 |
| 2509 | A 3 |
| 2520 | C 4 |
| 2521 | C 4 |
| 2531 | C 4 |
| 2532 | C 4 |
| 2533 | C 4 |
| 2542 | B 3 |
| 2544 | C 3 |
| 2545 | B 4 |
| 2546 | B 4 |
| 2547 | A 4 |
| 2549 | B 4 |
| 2550 | C 4 |
| 2551 | C 4 |
| 2560 | A 3 |
| 2570 | B 3 |

19
CHASSIS G110 SVHS

## 1004 SURROUND SOUND PANEL

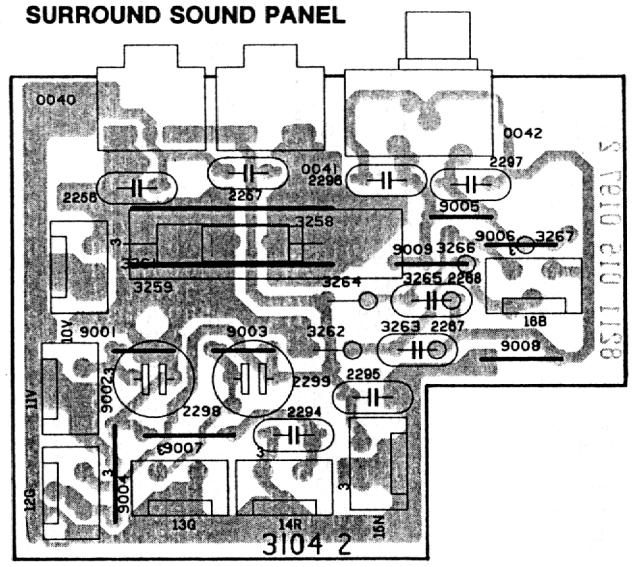


## 1995 STEREO SOUND MODULE

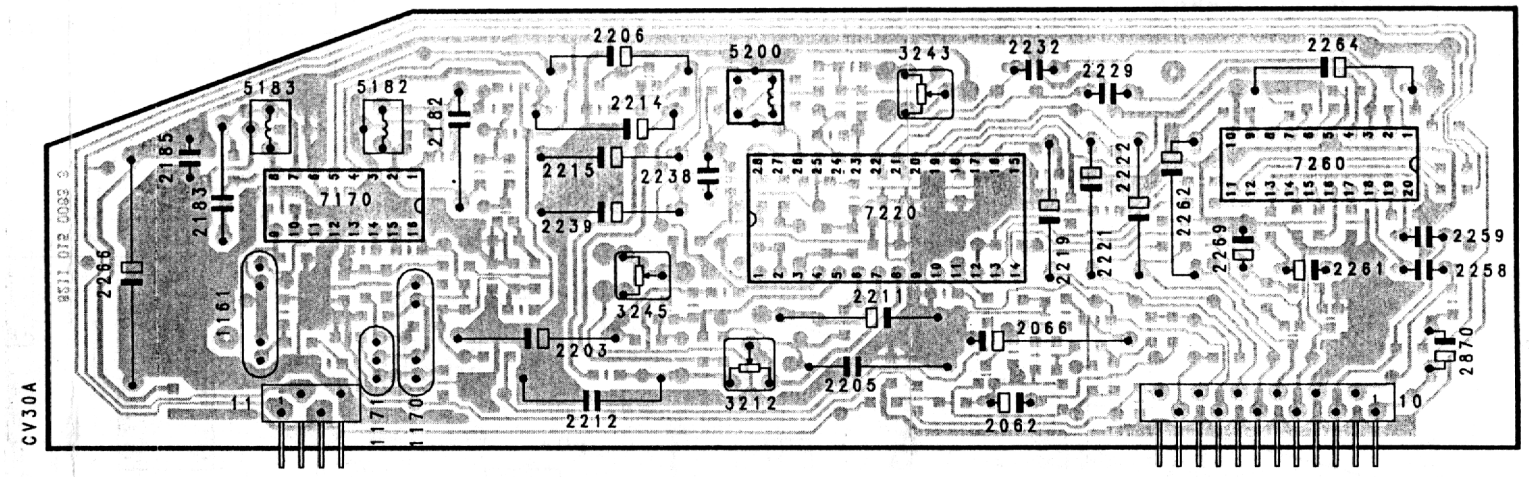


## 1995 STEREO SOUND MODULE

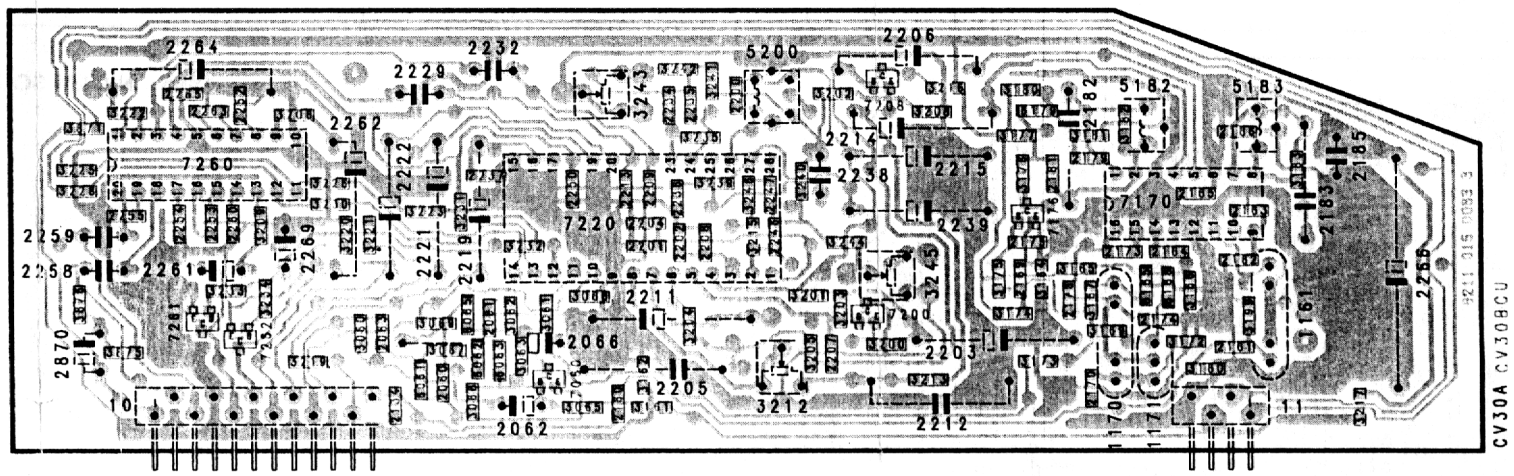

20
CHASSIS G110 SVHS

1995 NICAM SOUND MODULE

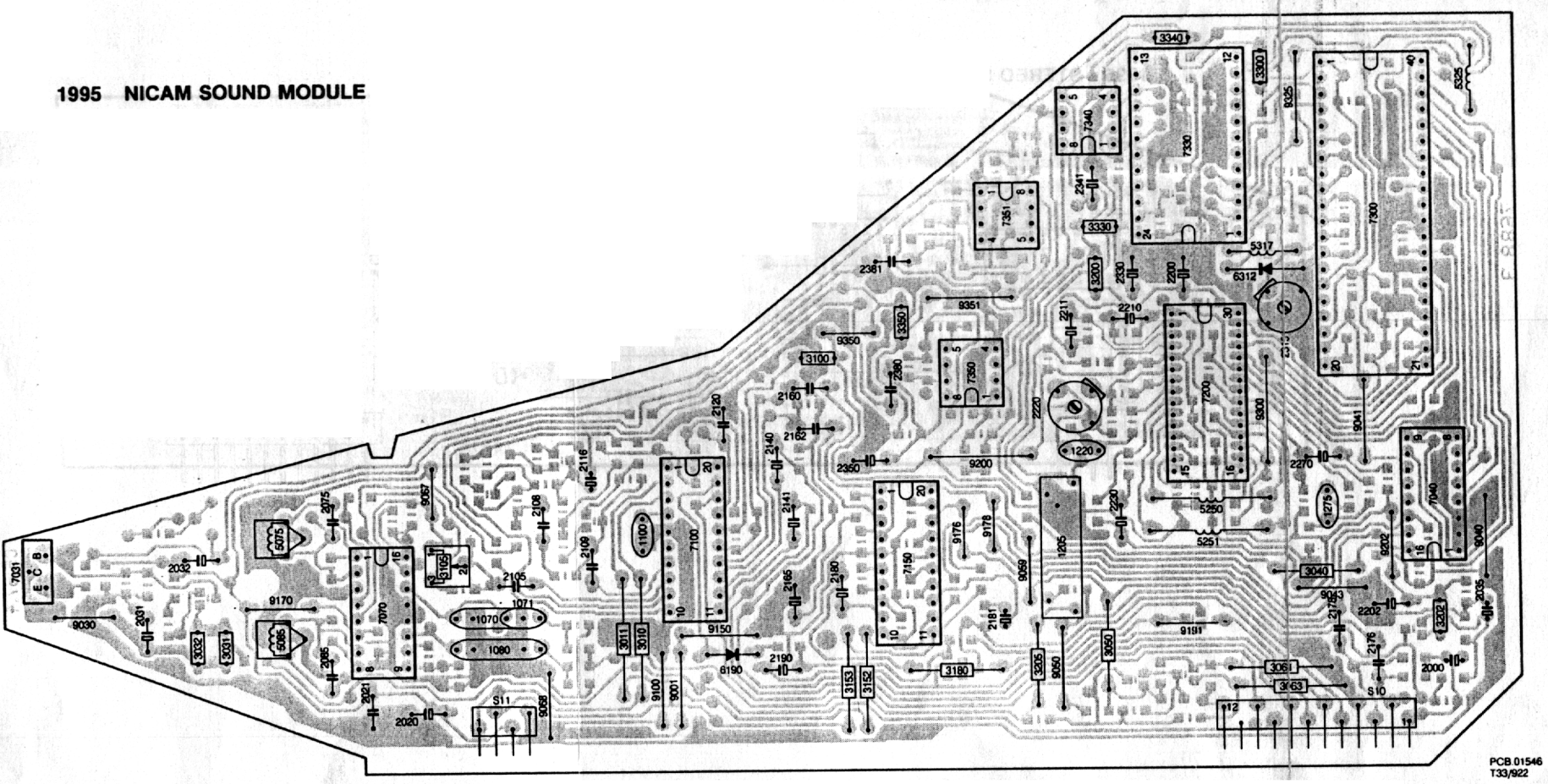

PCB.01546
T33/922

1995 NICAM SOUND MODULE

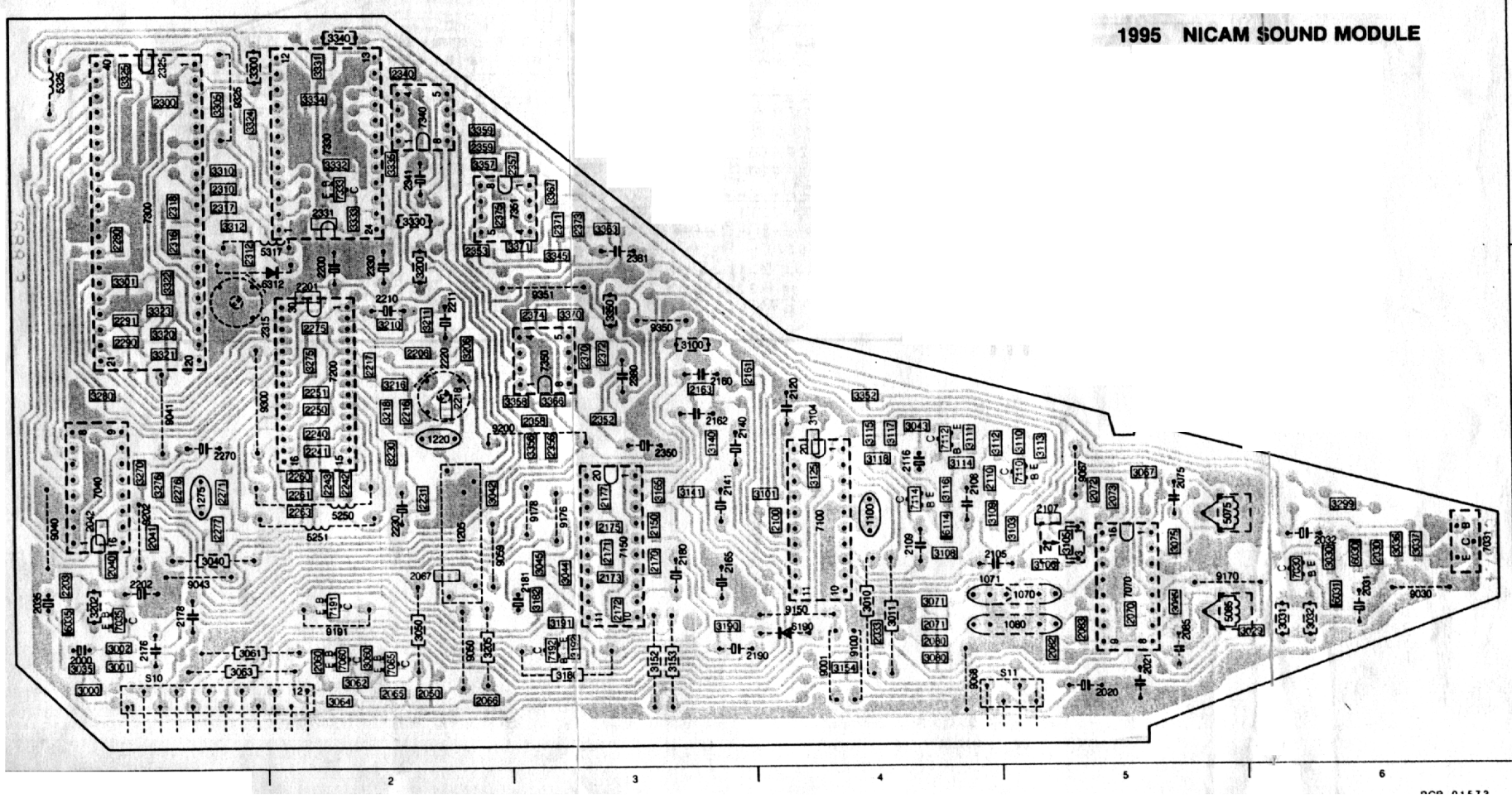

| | | | |
|---|---|---|---|
| 1070 C5 | 2316 A1 | 3276 B1 | |
| 1071 C4 | 2317 A1 | 3280 B1 | |
| 1080 C5 | 2318 A1 | 3299 C6 | |
| 1100 C4 | 2325 A1 | 3300 A1 | |
| 1205 C2 | 2330 B2 | 3301 B1 | |
| 1220 B2 | 2331 A2 | 3305 A1 | |
| 1275 B1 | 2340 A2 | 3310 A1 | |
| 2000 C1 | 2341 A2 | 3312 A1 | |
| 2020 C5 | 2350 B3 | 3320 B1 | |
| 2021 C5 | 2352 B3 | 3321 B1 | |
| 2030 C6 | 2353 A2 | 3322 B1 | |
| 2031 C6 | 2356 B3 | 3323 B1 | |
| 2032 C6 | 2357 A3 | 3324 A1 | |
| 2033 C4 | 2358 B3 | 3325 A1 | |
| 2035 C1 | 2359 A2 | 3330 A2 | |
| 2040 C1 | 2370 B3 | 3331 A2 | |
| 2041 C1 | 2371 A3 | 3332 A2 | |
| 2042 C1 | 2372 B3 | 3333 A2 | |
| 2060 C2 | 2373 A3 | 3334 A2 | |
| 2065 C2 | 2374 B3 | 3335 A2 | |
| 2066 C2 | 2375 A2 | 3340 A2 | |
| 2067 C2 | 2380 B3 | 3345 B3 | |
| 2070 C5 | 2381 B3 | 3350 B3 | |
| 2071 C4 | 3000 C1 | 3352 B4 | |
| 2072 B5 | 3001 C1 | 3356 B3 | |
| 2073 B5 | 3002 C1 | 3357 A2 | |
| 2075 B5 | 3010 C4 | 3358 B3 | |
| 2080 C4 | 3011 C4 | 3359 A2 | |
| 2082 C5 | 3029 C6 | 3363 A3 | |
| 2083 C5 | 3030 C6 | 3366 B3 | |
| 2085 C5 | 3031 C6 | 3367 A3 | |
| 2100 C4 | 3032 C6 | 3370 B3 | |
| 2105 C4 | 3035 C1 | 3371 A3 | |
| 2107 C5 | 3036 C6 | 5075 C5 | |
| 2108 B4 | 3037 C6 | 5085 C5 | |
| 2109 C4 | 3040 C1 | 5250 B2 | |
| 2110 B4 | 3042 B2 | 5251 C2 | |
| 2116 B4 | 3043 B4 | 5317 A2 | |
| 2120 B4 | 3044 C3 | 5325 A1 | |
| 2140 B3 | 3045 C3 | 6030 C6 | |
| 2141 B3 | 3050 C2 | 6031 C6 | |
| 2150 C3 | 3050 C2 | 6035 C1 | |
| 2160 B3 | 3060 C2 | 6114 C4 | |
| 2161 B3 | 3061 C1 | 6190 C4 | |
| 2162 B3 | 3062 C2 | 6312 B2 | |
| 2163 B3 | 3063 C1 | 7030 C6 | |
| 2165 C3 | 3064 C2 | 7031 C6 | |
| 2170 C3 | 3067 B5 | 7035 C1 | |
| 2171 C3 | 3071 C4 | 7040 B1 | |
| 2172 C3 | 3075 C5 | 7060 C2 | |
| 2173 C3 | 3080 C4 | 7065 C2 | |
| 2175 C3 | 3085 C5 | 7070 C5 | |
| 2176 C1 | 3100 B3 | 7100 C4 | |
| 2177 B3 | 3101 B4 | 7110 B5 | |
| 2178 C1 | 3103 C5 | 7112 B4 | |
| 2180 C3 | 3104 B4 | 7114 B4 | |
| 2181 C3 | 3105 C5 | 7150 C3 | |
| 2190 C3 | 3106 C5 | 7191 C2 | |
| 2200 B2 | 3108 C4 | 7192 C3 | |
| 2201 B2 | 3109 C4 | 7200 B2 | |
| 2202 C1 | 3110 B5 | 7300 A1 | |
| 2203 C1 | 3111 B4 | 7330 A2 | |
| 2206 B2 | 3112 B5 | 7333 A2 | |
| 2210 B2 | 3113 B5 | 7340 A2 | |
| 2211 B2 | 3114 B4 | 7350 B3 | |
| 2216 B2 | 3115 B4 | 7351 A3 | |
| 2217 B2 | 3116 B4 | 9001 C4 | |
| 2218 B2 | 3117 B4 | 9030 C6 | |
| 2220 B2 | 3118 B4 | 9040 C1 | |
| 2230 C2 | 3125 B4 | 9041 B1 | |
| 2231 B2 | 3140 B3 | 9043 C1 | |
| 2240 B2 | 3141 B3 | 9050 C2 | |
| 2241 B2 | 3152 C3 | 9059 C2 | |
| 2242 B2 | 3153 C3 | 9067 B5 | |
| 2243 B2 | 3154 C4 | 9068 C4 | |
| 2250 B2 | 3165 B3 | 9100 C4 | |
| 2251 B2 | 3180 C3 | 9150 C4 | |
| 2260 B2 | 3182 C3 | 9170 C5 | |
| 2261 B2 | 3190 C3 | 9176 C3 | |
| 2263 C2 | 3191 C3 | 9178 B3 | |
| 2270 B1 | 3192 C3 | 9191 C2 | |
| 2271 B1 | 3200 B2 | 9200 B2 | |
| 2275 B2 | 3202 C1 | 9202 C1 | |
| 2276 B1 | 3205 C2 | 9300 B1 | |
| 2277 C1 | 3206 B2 | 9325 A1 | |
| 2280 A1 | 3210 B2 | 9350 B3 | |
| 2290 B1 | 3211 B2 | 9351 B3 | |
| 2291 B1 | 3216 B2 | S10 C1 | |
| 2300 A1 | 3218 B2 | S11 C5 | |
| 2310 A1 | 3230 B2 | | |
| 2312 A1 | 3270 B1 | | |
| 2315 B1 | 3275 B2 | | |

## INDEX BELONGING TO DIAGRAM E

| | | | |
|---|---|---|---|
| 1070-B3 | 2250-F6 | 3075-B5 | 3320-I 12 |
| 1071-B3 | 2251-F6 | 3080-C3 | 3321-I 13 |
| 1080-C3 | 2260-G7 | 3085-D5 | 3322-I 13 |
| 1100-D8 | 2261-G8 | 3100-E3 | 3323-I 13 |
| 1205-H3 | 2263-J7 | 3105-B6 | 3330-F16 |
| 1220-J5 | 2270-I 7 | 3106-B6 | 3331-G15 |
| 1275-J8 | 2270-C18 | 3107-B7 | 3332-G15 |
| 2000-A13 | 2271-J8 | 3108-C7 | 3333-G15 |
| 2020-E3 | 2271-D20 | 3110-E6 | 3335-G17 |
| 2021-E3 | 2272-D18 | 3111-D6 | 3340-J17 |
| 2030-J2 | 2273-C18 | 3112-D6 | 3345-J19 |
| 2031-J2 | 2274-C20 | 3113-E6 | 3350-E3 |
| 2032-I 3 | 2275-J8 | 3114-D6 | 3356-H19 |
| 2035-F2 | 2276-J8 | 3116-D7 | 3357-I 19 |
| 2040-G14 | 2277-J9 | 3117-E7 | 3358-G19 |
| 2041-F14 | 2279-C18 | 3118-C7 | 3359-I 19 |
| 2042-F14 | 2280-I 9 | 3125-D12 | 3366-H20 |
| 2050-G1 | 2280-D18 | 3140-C12 | 3367-J20 |
| 2060-H1 | 2283-F19 | 3141-C12 | 3370-H20 |
| 2065-H2 | 2285-I 23 | 3152-E16 | 3371-J20 |
| 2066-H3 | 2286-B19 | 3153-E16 | 5075-A5 |
| 2067-H3 | 2287-A20 | 3159-D1 | 5085-D5 |
| 2070-B4 | 2290-I 23 | 3165-D13 | 5250-G6 |
| 2071-B2 | 2291-J23 | 3180-C16 | 5251-G6 |
| 2072-C3 | 2291-H9 | 3182-B16 | 5290-I 22 |
| 2073-B4 | 2293-A19 | 3190-D16 | 5291-I 22 |
| 2075-A5 | 2294-D24 | 3191-C16 | 5317-J10 |
| 2080-C2 | 2295-D24 | 3192-D16 | 5325-J11 |
| 2082-C3 | 2296-C24 | 3200-F8 | 6030-J2 |
| 2083-C4 | 2297-C24 | 3202-F3 | 6031-J1 |
| 2085-D5 | 2300-J3 | 3205-H3 | 6035-F2 |
| 2100-F3 | 2310-I 10 | 3206-H4 | 6066-E18 |
| 2105-B7 | 2312-J10 | 3207-A18 | 6190-D16 |
| 2108-C7 | 2315-J10 | 3210-J6 | 6280-F19 |
| 2109-C7 | 2316-J10 | 3210-B18 | 6281-F19 |
| 2110-D6 | 2317-J11 | 3211-G5 | 6282-D19 |
| 2116-E7 | 2318-J11 | 3216-I 5 | 6283-B19 |
| 2120-D9 | 2325-J11 | 3218-J5 | 6284-B20 |
| 2140-B12 | 2330-G16 | 3223-D18 | 6285-B20 |
| 2141-B12 | 2331-G16 | 3224-B18 | 6312-J10 |
| 2150-D12 | 2340-J17 | 3230-J6 | 7030-J2 |
| 2160-C13 | 2341-J17 | 3261-E24 | 7031-I 2 |
| 2161-C12 | 2350-E3 | 3262-D23 | 7035-F2 |
| 2162-C13 | 2352-H21 | 3263-C24 | 7040-G11 |
| 2163-C12 | 2353-J21 | 3264-C23 | 7060-H2 |
| 2165-D12 | 2356-H19 | 3265-C24 | 7065-G2 |
| 2170-D15 | 2357-I 19 | 3270-J7 | 7070-C4 |
| 2171-B15 | 2358-G19 | 3270-A20 | 7100-D8 |
| 2172-D15 | 2359-I 19 | 3271-D20 | 7110-D6 |
| 2173-B16 | 2370-G20 | 3272-B21 | 7112-D6 |
| 2175-D14 | 2371-I 20 | 3274-C20 | 7114-D7 |
| 2176-B13 | 2372-H20 | 3275-I 8 | 7150-D13 |
| 2177-D14 | 2373-I 20 | 3275-B21 | 7191-C17 |
| 2178-B13 | 2374-H20 | 3276-J9 | 7192-D17 |
| 2180-C16 | 2375-J20 | 3279-F20 | 7200-I 5 |
| 2181-B16 | 2380-H21 | 3280-I 9 | 7270-B19 |
| 2190-D16 | 2381-I 21 | 3280-F20 | 7281-E19 |
| 2200-G9 | 3000-A13 | 3281-H22 | 7282-E20 |
| 2201-G9 | 3001-B13 | 3281-D19 | 7284-E19 |
| 2202-F3 | 3002-A13 | 3282-E19 | 7285-A18 |
| 2203-F3 | 3010-D10 | 3283-E19 | 7286-B18 |
| 2206-H4 | 3011-D10 | 3284-F18 | 7287-A20 |
| 2210-I 6 | 3030-J1 | 3285-F18 | 7300-I 10 |
| 2211-G5 | 3031-I 2 | 3288-F20 | 7330-I 14 |
| 2216-J5 | 3032-I 2 | 3289-I 22 | 7333-G15 |
| 2217-J5 | 3035-F2 | 3293-A19 | 7340-I 17 |
| 2218-J5 | 3040-G14 | 3294-A19 | 7350-H19 |
| 2220-J5 | 3050-G1 | 3296-A19 | 7351-J19 |
| 2230-J6 | 3060-G2 | 3297-B19 | G15 -D23 |
| 2231-J6 | 3061-H2 | 3298-B20 | R10 -E23 |
| 2240-J7 | 3062-G2 | 3299-J22 | R15 -D23 |
| 2241-G8 | 3063-H2 | 3300-J3 | |
| 2242-G7 | 3064-H2 | 3310-I 10 | |
| 2243-G7 | 3071-C3 | 3312-I 10 | |